AD-A190 234 REVISED IMPACT DYNAMIC DESIGN-ANALYSIS METHOD (RIDDAM) 1/1
(U) NAVAL RESEARCH LAB WASHINGTON DC R L DORT
10 FEB 88 NRL-MR-6123

UNCLASSIFIED F/G 13/10.1 NL

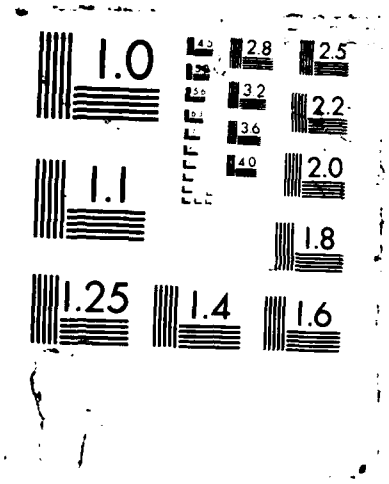
1.0
2.8
2.5
3.2
2.2
3.6
4.0
2.0
1.1
1.8
1.25
1.4
1.6

DTIC FILE COPY

(4)

Naval Research Laboratory
Washington, DC 20375-5000

NRL Memorandum Report 6123

AD-A190 234

Revised Impact Dynamic Design-Analysis Method (RIDDAM)

R.L. BORT

Structural Integrity Branch
Material Science and Technology Division

February 10, 1988

DTIC
ELECTE
FEB 23 1988
S D
E

88 2 22 214

Approved for public release, distribution unlimited.

A190 234

SECURITY CLASSIFICATION OF THIS PAGE

REPORT DOCUMENTATION PAGE

Form Approved
OMB No 0704-0188

1a REPORT SECURITY CLASSIFICATION UNCLASSIFIED	1b RESTRICTIVE MARKINGS
2a SECURITY CLASSIFICATION AUTHORITY 2b DECLASSIFICATION / DOWNGRADING SCHEDULE	3 DISTRIBUTION / AVAILABILITY OF REPORT Approved for public release; distribution unlimited.
4 PERFORMING ORGANIZATION REPORT NUMBER(S) NRL Memorandum Report 6123	5 MONITORING ORGANIZATION REPORT NUMBER(S)
6a NAME OF PERFORMING ORGANIZATION: Naval Research Laboratory 6b OFFICE SYMBOL (If applicable): Code 6337	7a NAME OF MONITORING ORGANIZATION
6c ADDRESS (City, State, and ZIP Code) Washington, DC 20375-5000	7b ADDRESS (City, State, and ZIP Code)
8a NAME OF FUNDING / SPONSORING ORGANIZATION: Naval Sea Systems Command 8b OFFICE SYMBOL (If applicable): Code 55X11	9 PROCUREMENT INSTRUMENT IDENTIFICATION NUMBER
8c ADDRESS (City, State, and ZIP Code) Washington, DC 20362-5101	10 SOURCE OF FUNDING NUMBERS PROGRAM ELEMENT NO: 63561N PROJECT NO: TASK NO: S0971 WORK UNIT ACCESSION NO: DN980-160

11 TITLE (Include Security Classification)
Revised Impact Dynamic Design-Analysis Method (RIDDAM)

12 PERSONAL AUTHOR(S)
Bort, R.L.

13a TYPE OF REPORT	13b TIME COVERED	14 DATE OF REPORT (Year, Month, Day)	15 PAGE COUNT
Interim	FROM 10/86 TO 9/87	1988 February 10	87

16 SUPPLEMENTARY NOTATION

17 COSATI CODES		
FIELD	GROUP	SUB-GROUP

18 SUBJECT TERMS (Continue on reverse if necessary and identify by block number)
Torpedo impact
Impact dynamic design-analysis method (IDDAM)

19 ABSTRACT (Continue on reverse if necessary and identify by block number)

Theory and examples are shown for a feasible method of estimating responses of equipment to an impact of an exercise torpedo against the hull of a submarine. The equipment is modeled as a linear and elastic system whose normal modes of vibration respond in accordance with their weight and frequency. A simple method is used for determining the effective weight of a normal mode. The method is applicable to multiple modes and independent motions of multiple supports.

20 DISTRIBUTION / AVAILABILITY OF ABSTRACT ☒ UNCLASSIFIED/UNLIMITED ☐ SAME AS RPT ☐ DTIC USERS	21 ABSTRACT SECURITY CLASSIFICATION UNCLASSIFIED
22a NAME OF RESPONSIBLE INDIVIDUAL Robert L. Bort	22b TELEPHONE (Include Area Code) (202) 767-2776 22c OFFICE SYMBOL Code 6337

DD Form 1473, JUN 86 Previous editions are obsolete SECURITY CLASSIFICATION OF THIS PAGE

S/N 0102-LF-014-6603

CONTENTS

INTRODUCTION 1

Background 1
Revision of the IDDAM 2
Procedure 4
Outline 5

THEORY 6

Mathematical Model 6
Normal Modes of Vibration 7
Modal Mass 9
Inputs 13
Accelerations, Forces, Stresses, and Deformations 14
Warpage 15
Summary 16

APPLICATION 17

Units 17
Scaling of Modeshapes 18
Suppression of Time Histories 20
Time Histories and Combination Rules 21
Combining Peak Responses from Different Supports 22
Combining Peak Responses for Modes of Different Frequencies 22
Selection Rules for the NRL Sum 24
Summary 25

SPECIAL PROBLEMS 27

Design Spectra 27
Repeated Frequencies 27
Closely-Spaced Modes 28
Rules of Thumb 31

EXAMPLES 32

A Textbook Example 32
An Example with Cross-Axis Response 39
An Example with Rotational Inertia 43
A Real Example 48

APPENDIX A - A Short Introduction to Matrix Algebra 59

APPENDIX B - A Computer Program for RIDDAM 65

Accession For
NTIS GRA&I ☒
DTIC TAB ☐
Unannounced ☐
Justification

By
Distribution/
Availability Codes
Dist | Avail and/or Special
A-1

REVISED IMPACT DYNAMIC DESIGN-ANALYSIS METHOD (RIDDAM)

INTRODUCTION

BACKGROUND

DDAM

A particular dynamic design-analysis method, DDAM, has been applied to selected equipment on Navy ships since 1960. The DDAM is based on measurements of the responses of shipboard equipment to controlled tests against ships with underwater explosions. Measurements from a variety of ships showed that the responses of equipment to the shock from an underwater-explosion attack could be approximated fairly well by considering only the location of the equipment on the ship, the weight of the equipment, and its natural frequency of vibration. Collected measurements were fitted to simple formulas depending on location, weight, and frequency that could be used to check the ability of equipment to resist shocks from underwater explosions.

The DDAM can be looked at in modern terms as an approximate method of conducting a substructure analysis of a complex dynamic system. In the DDAM all of the effort in the analysis is directed toward one particular substructure, representing the equipment of interest. The main structure, consisting of all the rest of the ship, is taken as a standard structure whose properties do not need to be specially determined. The experimental measurements of the shock that the ship can transmit to equipment of different weights and frequencies during an underwater-explosion attack take the place of an analysis of the ship's structure.

The effort of the analyst in applying the DDAM is limited to determining the frequencies and weights associated with one particular item of equipment. The formulas from the DDAM then provide the analyst immediately with the responses that would be expected at each weight and frequency if the equipment were mounted at a particular location on a standard ship during an attack against the ship with an underwater explosion. The analyst performs

Manuscript approved November 13, 1987.

in effect, a substructure analysis without having to analyze the main structure or consider location of the equipment beyond the broad categories given in the formulas.

IDDAM

Calculations for the DDAM are based on the assumption that the shock from an underwater explosion produces a translation of the ship in a single direction, with all of the supports for the equipment moving identically. This is generally a good approximation for compact equipment or for explosions that take place in the water some distance from the ship.

An extension of the DDAM, referred to as IDDAM (Impact DDAM) was developed in 1977 in response to a request for a dynamic design-analysis method that could be applied to the case of the impact of exercise (nonexploding) torpedoes against the hull of a submarine. Here the shock applied to the several supports for a particular item of equipment attached to the hull could vary greatly, from a severe shock to a support directly in way of the impact to shocks of smaller and smaller severity with increase in distance from the point of impact.

Determining the response of a structure to independent motions of multiple supports involved only a minor elaboration of DDAM. However, the weight of the structure had to be distributed among the separate supports in a self-consistent fashion in order to allow the simple formulas involving weight and frequency to be applied. When all of the supports move identically, as in DDAM, the full weight reacts against the common motion, but when the motions are different the weight appears as a combination of direct and cross terms among the supports, adding appreciably to the complexity of the method.

REVISION OF THE IDDAM

RIDDAM

The present report describes a new version of the IDDAM referred to here as RIDDAM (Revised IDDAM). The RIDDAM simplifies the method of calculating the effective weight of a structure with multiple supports.

Computer-aided analysis

The original DDAM was developed at a time when structural-analysis computations were regularly done using pencil, paper, and a desk calculator. Its procedures have been carried over to the present IDDAM.

First, turn on your computer. In the following, the equations for the IDDAM have been written using the matrix notation that is common for computer-aided analysis, on the assumption that a computer rather than a desk calculator will be used to analyze the structure. Appendix A gives some of the elements of matrix algebra for readers who are not entirely familiar with matrix notation. Appendix B lists a computer program that can be used to analyze simple structures on any computer that has a compiler or interpreter for the BASIC computer language.

The rewritten equations for the IDDAM produce a more compact notation and simpler calculations but make no change in its procedures.

Effective weight

The RIDDAM does make a substantial change in procedures by the method it uses to determine effective weight, however.

In both the DDAM and the IDDAM the weight of a normal mode of vibration is considered as reacting against supports only to the extent that the supports are driven by a shock input. The weight of a mode thus varies with direction of the input in the DDAM and varies with the distribution of shock severities among the supports in the IDDAM.

The method of determining the weight of a mode in the RIDDAM presumes that the mode reacts against all of the supports whenever it responds to a shock delivered through any of them. The effective modal weight in the RIDDAM is thus independent of the particular shock that is applied. Calculations are not only simplified, but reduced to the more-rational basis of assuming that the structure reacts against all of its supports whenever it is forced to undergo accelerations from any cause.

PROCEDURE

Mathematical model

The equipment (substructure) is modeled as a linear, elastic, and undamped structure. Details of the model depend on requirements of the computer program that is used.

Frequencies

Frequencies are found by doing a standard normal-mode analysis of the model with fixed interfaces at the points of attachment to the ship.

Participation factors

The normal-mode analysis provides a set of factors showing how the motion of each support participates in producing a response of each of the normal modes.

Modal weights

The critical feature of both the DDAM and the IDDAM is the assignment of an effective mass to each normal mode of vibration. The effective mass is used as a measure of the reactive force that the mode applies to the supports for the equipment when the equipment is accelerating in response to a shock. In the RIDDAM this effective mass is obtained simply by adding mass-normalized participation factors by absolute value and squaring the sum.

Inputs

As for the DDAM, the "inputs" for the IDDAM are formulas showing the *response* of a normal mode of vibration as a function of its weight, frequency, and location on board ship. In the DDAM, all of the supports are assumed to move together in one particular direction. The IDDAM relaxes this assumption by providing different inputs for different supports. The RIDDAM uses the same inputs as the IDDAM

Stresses and deformations

Responses of the modes are combined to estimate forces, stresses, strains, and deformations throughout the model of the equipment. The stresses and deformations at critical locations are compared with allowable values to assess the ability of the equipment to withstand a particular shock. Deformations produced by differences in the motions of redundant supports are included in both the IDDAM and the RIDDAM.

OUTLINE

The report begins with a brief overview of the theoretical basis for the normal-mode method used in the RIDDAM. It continues with a discussion of some of the practical compromises that are necessary to keep its implementation simple, and a description of some of the problems that the compromises generate. There are some worked-out examples of analyses of simple structures by the RIDDAM. The object is to supply enough information so that an analyst can apply the RIDDAM to his own item of equipment by following the discussions and examples given here.

THEORY

MATHEMATICAL MODEL

Balance of forces

Most computer programs for dynamic analysis represent the structure by a matrix equation of the form

$$\mathbf{M}\,\mathbf{a} + \mathbf{K}\,\mathbf{x} = \mathbf{F}\,\mathbf{u}, \qquad (1)$$

where $\mathbf{a}(t)$ is a time-varying column vector of accelerations at selected points (nodes) on the structure and $\mathbf{x}(t)$ is a column vector of displacements. The symmetric matrices $\mathbf{M}$ and $\mathbf{K}$ represent the mass and stiffness of the structure. The column vector $\mathbf{u}(t)$ consists of displacements of the supports for the structure; the rectangular matrix of support stiffnesses $\mathbf{F}$ converts displacements of the supports into forces applied to the coordinates of the structure. The equation balances these forces against the forces $\mathbf{Ma}$ and $\mathbf{Kx}$ from the mass and stiffness of the structure.

The motions represented by Equation 1 can be translations in any direction or rotations about any axis, with elements of $\mathbf{M}$, $\mathbf{K}$, and $\mathbf{F}$ being mass, mass moment of inertia, force per deflection, or moment per angle. It is assumed that all the translations and rotations are small, the stiffnesses are constant, and there is no damping in the structure.

Discussions here are framed in terms of translations (displacements and forces) with the understanding that rotational motions (angles and moments) are also included.

Other representations

Some methods of structural analysis are based on other than the force-balance equation. For example, the displacement-balance equation

$$\mathbf{K}^{-1}\,\mathbf{M}\,\mathbf{a} + \mathbf{x} = \mathbf{K}^{-1}\,\mathbf{F}\,\mathbf{u} \qquad (2)$$

has been popular for use with a desk calculator. Here $\mathbf{K}^{-1}$ (the inverse of the stiffness matrix) is a matrix of influence coefficients that shows the displacements of all the points on the structure when unit force is applied to one of the points. The support influence matrix $\mathbf{K}^{-1}\mathbf{F}$ represents the position of the structure produced by the motion of its supports. The equation balances these equilibrium displacements against the dynamic displacements that include forces from the accelerations of the masses.

The displacement-balance equation is not well suited to computer-aided analyses because the matrix $\mathbf{K}^{-1}\mathbf{M}$ is full of nonzero elements and is not symmetric. A computer needs less memory and can run faster using the matrices $\mathbf{M}$ and $\mathbf{K}$, both of which are sparse and symmetric.

Discussions here are in terms of the force-balance equation as the equation most common in computer programs for dynamic structural analysis.

NORMAL MODES OF VIBRATION

Mass normalization

Many computer programs begin a normal-mode analysis by generating a square or rectangular matrix $\mathbf{Q}$ that makes

$$\mathbf{Q}^T \mathbf{M} \mathbf{Q} = \mathbf{I} \tag{3}$$

be a unit matrix. Normalizing on the mass matrix in this way produces a simple and efficient analysis, and has been assumed in the following discussion. A later paragraph will consider the alterations that are necessary when other methods of normalization are used.

Diagonalizing the stiffness matrix

The matrix $\mathbf{Q}$ can also be chosen to make

$$\mathbf{Q}^T \mathbf{K} \mathbf{Q} = \mathbf{P}^2 \tag{4}$$

be a diagonal matrix. There are many different numerical methods for generating a **Q** that will satisfy Equations 3 and 4 simultaneously. Which is best depends on the size of the problem, the distribution of the nonzero elements in **M** and **K**, and how many elements of **Q** are to be calculated. Many programs offer a choice of methods and may also have ways of decreasing the sizes of the structural matrices to speed up the calculation.

Normal-mode equations

If the matrix **Q** is used to transform the accelerations and displacements by

$$\mathbf{a} = \mathbf{Q}\,\mathbf{b}, \qquad \mathbf{x} = \mathbf{Q}\,\mathbf{y}, \tag{5}$$

and if Equation 1 is premultiplied by $\mathbf{Q}^T$, there results

$$\mathbf{b} + \mathbf{P}^2\,\mathbf{y} = \mathbf{Q}^T\,\mathbf{F}\,\mathbf{u}. \tag{6}$$

Because $\mathbf{P}^2$ is diagonal, each element of the acceleration $\mathbf{b}(t)$ and displacement $\mathbf{y}(t)$ on the left side represents an independent oscillator with a fixed-base angular frequency given by the square root of its element of $\mathbf{P}^2$. The responses of the oscillators can be converted back to motions of the structure by Equation 5.

Standard form

Equation 6 can be reduced to standard form for each oscillator by writing it as

$$\mathbf{b} + \mathbf{P}^2\,\mathbf{y} = \mathbf{P}^2\,\mathbf{R}^T\,\mathbf{u}, \tag{7}$$

where

$$\mathbf{R}^T = \mathbf{P}^{-2}\,\mathbf{Q}^T\,\mathbf{F} \tag{8}$$

is a rectangular matrix called the *participation factor*. The matrix $\mathbf{R}^T$ converts the displacements $\mathbf{u}(t)$ of the supports to a generalized

displacement representing the motion of the base of each one of the normal-mode oscillators. The participation-factor matrix has as many columns as there are separate supports for the structure, and as many rows as there are normal modes.

Each of the normal modes in Equation 7 responds as if it were a single oscillator supported from a base whose displacement is given by one of the elements of $\mathbf{R}^T\mathbf{u}(t)$. That is, if $y(t)$ is the displacement and $b(t)$ is the acceleration of one of the normal modes, the equation for its response is

$$b + P^2 y = P^2 \mathbf{r}^T \mathbf{u}, \tag{9}$$

where $\mathbf{r}^T$ is the row from $\mathbf{R}^T$ that corresponds to the elements $y(t)$ and $b(t)$, and P^2 is the square of the angular frequency of the mode.

MODAL MASS

What the modal mass does

A force is required to produce an acceleration of a real structure that has mass. This force reacts against the supports for the structure and, in all practical cases where the supports are attached to some other structure, produces motions of the supporting structure.

The displacements $\mathbf{u}(t)$ of the supports need to be considered as consisting of two components. One component is the motion (or lack of motion) that would be expected if the structure were not in place. The other component is the motion produced by the reaction force as the structure accelerates.

If the structure is analyzed into its normal modes, each normal mode needs to be assigned a mass so its reaction force can be determined.

A simple example of modal mass

Suppose a single mass M is supported by a set of parallel springs having a total stiffness K. The equation of motion can be written

$$M a + K x = \mathbf{f}^T \mathbf{u}. \tag{10}$$

where $\mathbf{f}^T$ is a row vector whose elements are the stiffnesses of the individual springs and $\mathbf{u}(t)$ is a column vector of the displacements at the points where each spring is attached to some other structure.

Follow the method of analysis given in the preceding sections as if the mass M and the stiffness K were matrices with just one row and one column. First define a modeshape Q that makes

$$Q M Q = 1. \tag{11}$$

Notice that Q is the inverse square root of M, and that

$$Q K Q = K/M = p^2 \tag{12}$$

is the square of the natural frequency of the mass as supported by all the springs.

Continue to find the participation factor

$$\mathbf{r}^T = p^{-2} Q \mathbf{f}^T \tag{13}$$

and reduce it to

$$\mathbf{r}^T = (K/M)^{-1} M^{-1/2} \mathbf{f}^T = \sqrt{M}\, \mathbf{f}^T/K. \tag{14}$$

Summing the elements of the participation-factor vector gives the square root of M, and squaring the sum recovers M as the mass of the single mode of the structure.

The same procedure can be applied to Equation 9 to determine an effective mass for the mode whose acceleration is b(t). That is, add the elements of the row from the participation-factor matrix and square the sum to find the mass that must be accelerated when the structure responds with motions in one particular normal mode of vibration.

Avoiding an analysis of the supporting structure

The advance of the DDAM was in pointing out that the effect of reaction forces on a particular structure can be found experimentally by mounting substructures to it and measuring the responses of substructures having different masses and frequencies. The results from the tests can then be applied to predict the responses of modes of other items mounted to the structure provided their masses and frequencies are known. The supporting structure thus does not need to be analyzed in order to estimate the shock response of items attached to it.

Some approximation is inherent in this assumption, especially if responses measured for one particular structure are applied to different but similar structures. Supporting structures can differ because of other substructures mounted near the substructure of interest, or even as a result of other modes of the substructure being analyzed. However, the advantage of being able to estimate the response of a particular item of equipment without having to make a detailed analysis of the supporting ship's structure makes the method attractive despite the potential errors.

Independent motions of multiple supports

Squaring the sum of the elements in a row of the influence-coefficient matrix, as shown in the simple example above, will give an effective mass for the mode if all the reactions are in the same direction, as they were for the parallel springs in the example. If some of the reactions are positive and some are negative, the squared sum will give an effective mass producing a net force on all of the supports taken together. This is the effective mass used in the DDAM, where differences in the motions of different supports are not considered.

If each point of support is taken as attached to a separate structure, the reactions will produce independent motions of each support in accordance with the direction and magnitude of each force. In this case the effective mass acting against all the supports should be determined by adding the participation factors by absolute value (that is, ignoring their directions) and then squaring the sum. Notice

that with independent motions of multiple supports, the reactions occur and the supports are moved whenever a mode is accelerated, whether the acceleration was initiated by a shock delivered through a particular support or not.

Using the square of the sum of the absolute values of the mass-normalized participation factors as a measure of the mass of a normal mode of vibration is the only substantial change that the RIDDAM makes in the IDDAM. The IDDAM distributed the mass of each mode among the supports in accordance with the shock severity at each support. In the RIDDAM each mode has a mass that is independent of the shocks that are applied.

Comparison of approximations in determining modal mass

In the original DDAM, the shock motion of a ship was considered to be a rigid-body translation in a single direction. All the supports for an item of equipment underwent the same motion and the masses of the modes were the effective masses reacting against that common motion. In the RIDDAM each support is taken as attached to a structure that can move independently of the other supports and the effective mass of each mode reacts against all of the supports in whatever direction applies at each support.

It is recognized, of course, that points located near one another on the structure of a ship are neither tied rigidly together (DDAM) nor completely independent (RIDDAM). The object of the procedures adopted in each case is to provide a reasonable and simple method of estimating the effects of the reaction forces without having to extend the analysis into the details of the supporting structure.

Limitations

The example shown in Equations 10 to 14 was for a single mass moving in a single direction. Later examples will show that the procedure of adding influence coefficients by absolute value and squaring the sum gives an effective mass for a mode even when a structural model includes translations in different directions or rotations about different axes.

The IDDAM inputs represent linear accelerations as a function of effective mass and frequency. Applied through different supports, these accelerations can induce rotational and cross-axis responses of a structure. However, no inputs are supplied to show how the response of a structure to a rotation of one of its supports might depend on the mass moment of inertia about that support.

The RIDDAM uses the inputs developed for the IDDAM. As a result of the lack of rotational inputs, it is necessary that the structure be modeled so that its response depends on translational inputs only. This can be done in either of two ways: A support can be taken as irrotational, so that moments applied to it do not cause any rotation. Alternately, the joint at the support can be taken as pinned, so that the structure can rotate freely about that point without producing any rotation of the supporting structure.

INPUTS

Differential equations

The inputs to the analysis consist of predetermined solutions to the equations

$$M c + M P^2 z = M P^2 u, \qquad (15)$$

where c(t) is the acceleration and z(t) is the displacement of an oscillator having mass M and frequency P. Here u(t) is the displacement of the support for the oscillator, including both the motion induced by an external force and the motion resulting from the reaction of the mass of the oscillator against its support.

Because of the reaction, the acceleration of the oscillator varies with its mass as well as with its frequency. In the DDAM, all the support motions are taken as identical, so only one function is needed for the base motion u(t), but in the IDDAM the supports can move independently and there is a separate Equation 15 for the effect of each support on each mode.

Applying the inputs to the normal modes

The equation for the response of one of the normal modes,

$$b + p^2 y = p^2 \mathbf{r}^T \mathbf{u}, \tag{16}$$

uses a row from the influence-coefficient matrix to take a linear combination over the motions of all of the supports and uses that combination to find the response of the mode. The process can be reversed by calculating responses first and then taking the linear combination to obtain

$$b = \mathbf{r}^T \mathbf{c}, \tag{17}$$

where $b(t)$ is the acceleration of the mode and $\mathbf{c}(M, P, t)$ is a column vector of the solutions to Equation 15 for the mass and frequency of the mode and for the shock applied to each of the supports.

If the response accelerations $c(M, P, t)$ for each support are already provided, Equation 17 will give the responses for the modes of the substructure without the necessity of solving any differential equations.

ACCELERATIONS, FORCES, STRESSES, AND DEFORMATIONS

Accelerations

Scale the matrix of modeshapes to

$$\mathbf{A} = \mathbf{Q}\,\mathbf{B}, \tag{18}$$

where $\mathbf{B}(t)$ is a diagonal matrix of the accelerations $b(t)$ of the individual modes and $\mathbf{A}(t)$ is now, by Equation 5, a matrix whose columns represent the accelerations of the coordinates of the structure in each mode. It is convenient at this point to keep the responses in the different modes separate because of approximations that will be made later in combining responses in different modes.

Forces

Multiply the matrix of accelerations by the mass matrix **M** to obtain

$$\mathbf{G} = \mathbf{M}\,\mathbf{A} \tag{19}$$

as a matrix whose columns represent the forces applied to the structural nodes by the accelerations of each mode.

Stresses and deformations

The forces will produce time-varying stresses and deformations in the structure that are proportional to the combination of forces in each mode. The stresses and deformations at critical points on the structure can be used to estimate the ability of the structure to survive the accelerations given by the inputs.

WARPAGE

Additional deformations

The displacement-balance equation (Equation 2),

$$\mathbf{x} = \mathbf{K}^{-1}\mathbf{F}\,\mathbf{u} - \mathbf{K}^{-1}\mathbf{M}\,\mathbf{a} \tag{20}$$

shows that the response $\mathbf{x}(t)$ of the structure depends on the motions of its supports $\mathbf{u}(t)$ as well as on its acceleration $\mathbf{a}(t)$. The preceding modal analysis accounts for the forces, stresses, and deformations produced by acceleration only. It is necessary to supplement the acceleration-generated responses with a check of any additional deformations (and resulting stresses) that may be produced by differences in motions of individual supports.

Note that if the motions of the supports are all identical (as assumed in the DDAM) there will a displacement response but no additional deformation of the structure. There also is no warping deformation if the supports are not redundant or if the motions of the

supports can be described by a combination of rigid-body displacements and rotations.

Effect of reaction forces

The structure will resist warping deformation by generating static forces that tend to decrease the differences between the motions of its supports. Again, as in the case of the effect of modal mass on acceleration responses, an estimate of the effect of the reaction forces can be made in terms of an experimental or analytical decrease in warping with increasing static reactions of a structure against relative motions of a standard or typical supporting structure.

SUMMARY

The preceding theory shows how the responses of substructures can be estimated under standard conditions while mounted to a particular supporting structure. The characteristics of the supporting structure are evaluated by determining the responses it can produce in oscillators having different masses and frequencies and the static warpage it can produce in redundant supports with different reactions.

The structure of interest is then analyzed into oscillators having different masses and frequencies and into reactions against relative motions of its supports. Direct comparison with the responses determined for the supporting structure then allows responses of the structure to be estimated

The theory has the potential for being exact if the supporting structure were identical from one substructure to the next. In application, however, supporting structures tend to be similar but not identical. Then the accuracy of the method depends on how much variety is allowed in supporting structures before a new set of characteristics must be applied.

APPLICATION

UNITS

Convenience

The IDDAM is based on user-friendly engineering units in which Newton's law is satisfied for forces in pounds, masses in pounds, and accelerations in multiples of the acceleration of gravity. The acceleration of gravity is defined as 386 inches per second per second (9.8044 meters per second per second with one inch equal to 0.0254 meters). A pound of force is then 4.447 Newtons, while a pound of mass is 0.4536 kilograms.

Inputs

The tabulated inputs for the IDDAM give accelerations in multiples of the acceleration of gravity (g) as a function of weights in pounds and frequencies in Hertz (cycles per second).

Computer

Most computer programs will not allow forces and masses both to be entered in pounds. A common convention for using such programs in the inch-pound-second system is to enter masses in units of 386 pounds. That is, weights in pounds are divided by 386 to obtain masses for entry into the computer program. Forces can then be entered in pounds, with stiffnesses in pounds per inch and elastic moduli in pounds per square inch. There is no accepted name for the unit of mass that weighs 386 pounds, although the term "slinch" has been suggested as a parallel to the term "slug" that is used for the similar unit in the foot-pound-second system.

SCALING OF MODESHAPES

Arbitrary scaling

Some computer programs apply scale factors to the modeshapes to produce a modal matrix **QS**, where **S** is a diagonal matrix of scale factors. One popular method of scaling makes the largest element in each column of **QS** have the value unity, for example. The theory shown here was based on mass-normalized modeshapes in which $\mathbf{Q}^T\mathbf{M}\mathbf{Q} = \mathbf{I}$ was a unit matrix. Modifications are needed if modeshapes have been scaled otherwise.

Effect of the scaling

With scaled modeshapes,

$$(\mathbf{QS})^T \mathbf{M}\, \mathbf{QS} = \mathbf{S}^2 \tag{21}$$

is diagonal but not a unit matrix. Also,

$$(\mathbf{QS})^T \mathbf{K}\, \mathbf{QS} = \mathbf{S}^2 \mathbf{P}^2 \tag{22}$$

is diagonal but its elements are no longer the squares of the natural frequencies. Using the scaled modeshapes in the transformations

$$\mathbf{a} = \mathbf{QS}\, \mathbf{b}, \qquad \mathbf{x} = \mathbf{QS}\, \mathbf{y} \tag{23}$$

converts the force-balance equation

$$\mathbf{M}\, \mathbf{a} + \mathbf{K}\, \mathbf{x} = \mathbf{F}\, \mathbf{u} \tag{24}$$

to

$$\mathbf{S}^2 \mathbf{b} + \mathbf{S}^2 \mathbf{P}^2 \mathbf{y} = (\mathbf{QS})^T \mathbf{F}\, \mathbf{u} \tag{25}$$

as the analog of the normal-mode equations.

A misinterpretation

The elements of S^2 in Equation 25 have been referred to as masses of the normal modes and even used as if they were masses in some calculations. One popular computer program refers to them as "generalized masses" in its printed output. The elements of S^2 have completely arbitrary positive values that depend only on what criterion was used to scale the modeshapes and have no physical significance.

Removing the scale factors

The scale factors contained in S must simply be removed step-by-step as the analysis proceeds. First, divide by the elements of S^2 to obtain the squares of the natural frequencies as

$$\mathbf{P}^2 = \mathbf{S}^{-2} (\mathbf{S}^2 \mathbf{P}^2). \tag{26}$$

Next, recognize two kinds of participation factors. The mass-normalized participation factor must be recovered from

$$\mathbf{R}^T = \mathbf{S}^{-1} [\mathbf{P}^{-2} (\mathbf{QS})^T \mathbf{F}]. \tag{27}$$

The responses of the scaled modes, however, must be found from the equation

$$\mathbf{b} + \mathbf{P}^2 \mathbf{y} = \mathbf{P}^2 [\mathbf{P}^{-2} \mathbf{S}^{-2} (\mathbf{QS})^T \mathbf{F}] \mathbf{u}, \tag{28}$$

so that the participation factor for this operation must be obtained from

$$\mathbf{R}_1^T = \mathbf{P}^{-2} \mathbf{S}^{-2} (\mathbf{QS})^T \mathbf{F}. \tag{29}$$

Notice that any computer program that displays natural frequencies must have calculated a value of S^2 in order to evaluate Equation 26, so it should not be necessary to recalculate the scale factors (Equation 21) in order to find what factors to remove.

Avoiding the scaling

Many computer programs begin a normal-mode analysis by choosing a modeshape matrix that reduces $\mathbf{Q}^T\mathbf{MQ}$ to a unit matrix. With such programs the mass-normalized modeshapes are fundamental and subsequent scaling may be an option that need not be selected.

If only scaled modeshapes are available from a particular program, it may be more efficient to remove the scale factors directly from the modeshapes by dividing each column of **QS** by its element of **S** and then proceeding in a mass-normalized fashion, rather than dividing repeatedly by the scale factors as results are being calculated

SUPPRESSION OF TIME HISTORIES

Complication

The theory indicates that a supporting structure must be characterized by a set of time-history accelerations c(M, P, t) that differ for each mass M and frequency P of oscillator that may be supported from it. Moreover, the time histories cannot be oscillations at the frequency P, because P is a *fixed-base* frequency, and the essential feature of the supporting structure is that it cannot be considered to be a fixed base.

In addition, the response of a multimode structure with multiple independent supports must be determined by superposing separate time-history responses for each mode and each support. Such combinations were impractical for routine analyses when DDAM was under development about 1960.

Simplification

The IDDAM follows the lead established by the DDAM in suppressing the time variation of the response acceleration. It characterizes supporting structures in terms of the peak (largest absolute value) of acceleration that they can produce for an oscillator of mass M and fixed-base frequency P.

Suppressing the time histories allows supporting structures to be described by double-entry tables showing peak acceleration as a function of mass and frequency, and eliminates the superposition of time histories for multiple modes and multiple supports in determining responses. It leads to problems, however, in estimating the combined effects of several modes whose individual responses are given only in terms of their peak values.

TIME HISTORIES AND COMBINATION RULES

Upper and lower bounds

It is clear that if the peak responses of several modes were all to occur in the same direction at the same instant of time, the combined response would be the sum of the individual peaks and that this sum would be an upper bound for a time-history combination of responses. A lower bound may also exist if one of the peak values is large enough to dominate the combination even if all the other peaks happened to occur simultaneously in the opposite direction. Either occurrence is possible but unlikely in a sum of time histories.

Combination rules

Simple and arbitrary rules can be defined to estimate a peak from a combination of responses that are described only by their individual peak values. Any rule adopted ought to define a combined peak falling in the range from the lower to the upper bound. The rule should select a likely value in that range and should be adjusted to avoid too much overconservatism or underconservatism.

The exact form of a combination rule is not important in areas of a structure where one mode predominates, so that the upper and lower bounds do not differ greatly. A combination of engineering judgment, common sense, and experimental data are needed to determine combination rules when several modes have comparable peak values so that there is a large spread between upper and lower bounds. Under this condition the best rule would be one that avoids obvious conditions of great overestimates or underestimates, rather

than a rule that attempts to recreate an actual combination of time-history responses.

COMBINING PEAK RESPONSES FROM DIFFERENT SUPPORTS

Rule

A suitable rule for estimating the peak acceleration b of one mode from a collection of peak response accelerations **c** at different supports is

$$b = \mathbf{r}^T \mathbf{c}, \tag{30}$$

where $\mathbf{r}^T$ is the row for the mode from the participation-factor matrix.

Discussion

Equation 30 is identical to Equation 17 that was used for combining time histories. It presumes that the peak responses of the mode produced by the motions of each support all occur at the same instant of time and in directions given by the signs of the elements of the participation factor. Such a combination could actually occur under torpedo impact if the torpedo were to strike at the center of a symmetric array of supports, producing large responses to symmetric modes of the structure and no response for antisymmetric modes.

Equation 30 also reconciles the RIDDAM with the DDAM by matching its results with those of the DDAM for conditions in which all of the supports would have identical motions in a single direction.

In other cases the rule provides an estimated peak that falls between the upper and lower bounds for the combination.

COMBINING PEAK RESPONSES FOR MODES OF DIFFERENT FREQUENCIES

The NRL Sum

An estimate of the peak stress or deformation from a combination of peak stresses or deformations from modes of different

frequencies is obtained by selecting the response having the largest peak in absolute value and adding to it the square root of the sum of the squares of the peak values of the other responses. This method of combination is usually called the *NRL Sum*.

Estimated peaks obtained from the NRL Sum are always positive numbers, but are to be interpreted as representing peaks that may occur in either direction.

Warning

The NRL Sum is a nonlinear combination and must always be the last step in any calculation. In particular, if the NRL Sum is used to estimate a peak acceleration or a peak force from a combination of modal peaks, that estimated peak acceleration or force cannot be used subsequently to find stresses or deformations.

Estimating peak stresses and deformations

Equations 18 and 19 were especially written in a form to keep the responses of the structure in each of its modes separate down to the point of calculating stresses and deformations. If **B** is a diagonal matrix of the peak accelerations b in each mode, the peak accelerations of the structure in each mode are obtained by scaling the modeshape matrix according to

$$\mathbf{A} = \mathbf{Q}\,\mathbf{B}. \tag{31}$$

The peak forces on the structure in each mode are given by the columns of

$$\mathbf{G} = \mathbf{M}\,\mathbf{A}. \tag{32}$$

The stresses and deformations for each mode are obtained by solving a separate static problem for the peak loads **g** that appear in each column of the matrix of forces. The loads may be positive or negative, depending on the signs of the participation factors and the modeshapes; these signs must be preserved through Equations 31 and 32.

Strain energy

The strain energy associated with a peak response is proportional to the square of the strain multiplied by the elastic modulus of the material, or proportional to the square of the stress divided by the elastic modulus. Summing the squares of the peak responses thus gives a number proportional to the total energy a particular part of the structure must accept. The square root of that sum represents the single deformation or stress that would account for the same energy.

The NRL Sum provides an estimated peak response that is larger than the energy-equivalent peak, but not larger than the upper bound.

SELECTION RULES FOR THE NRL SUM

Peaks to be included

Peaks from the following sources are combined into a single NRL Sum:

1. Stresses and deformations from normal operation of equipment.
2. The warping deformations and stresses from differences in motions of multiple supports.
3. Stresses and deformations from some but not usually all of the normal modes. The NRL sum overestimates the energies for the modes that are included; this overestimate can be considered as an allowance for additional modes of the structure that were not included in the sum.

Modes to be selected

1. For simple structures that can be modeled with six or fewer degrees of freedom, the three modes of lowest frequency are usually sufficient for determining an NRL Sum.
2. Structures of moderate complexity (up to 60 degrees of freedom) need only the lower-frequency modes to be included in the

NRL Sum. About half as many modes as degrees of freedom is an appropriate combination in most cases.

3. Complicated models with very many degrees of freedom (as may be obtained from a finite-element model) may generate a "modal thicket" in which many of the low-frequency modes represent vibrations of lightweight parts of the structure. Here it may be better to select modes in accordance with modal weight rather than frequency. Modes having weights at least 2 percent of the weight of the complete model are most likely to be significant.

Prestresses and bolted joints

Built-in stresses, including prestresses in bolts, are not included in the NRL Sum of stresses. Bolted joints are expected to respond to tensile loads by decreasing the clamping force rather than by stretching the bolts. Special checks need to be made, however, to be sure than the clamping force is not exceeded by a peak load or that shear stress from a transverse load does not combine with the tensile stress in a bolt to produce an excessive value of maximum normal stress.

SUMMARY

The procedures for applying the theory to practical calculations with the RIDDAM can be summarized in eleven steps:

1. Make a mathematical model of the structure.
2. Find the fixed-base normal modes and the mass-normalized participation factors for the supports of the model.
3. Add the participation factors for each mode by absolute value and square the sum to find the effective mass of each mode.
4. Refer to tables and formulas showing peak accelerations as a function of the weight, frequency, and the location of an oscillator relative to the point of impact of a torpedo.
5. Combine the product of the participation factors and the tabulated accelerations for each support to find the peak acceleration of each mode.
6. Scale the modeshapes by the peak accelerations to find the peak acceleration of each point on the structure in each mode.

7. Multiply the peak accelerations of the structure by the mass matrix to find peak forces in each mode.

8. Solve the static problem for each mode to find peak stresses and deformations at critical parts of the structure.

9. Calculate stresses and deformations from warping of the structure caused by different motions of redundant supports..

10. Use the NRL Sum to combine stresses and deformations from operation, warping, and selected modes at critical points in the structure.

11. Compare the estimated peak stresses and deformations with allowable values.

SPECIAL PROBLEMS

DESIGN SPECTRA

The accelerations c(M, P) representing the peak accelerations for oscillators having masses M and fixed-base frequencies P can be called a *design spectrum*. Each point in a design spectrum is taken from a particular time-history response of a massive oscillator. That time history has been suppressed for simplicity.

The special problems described here arise from the suppression of the time histories associated with the design spectra.

REPEATED FREQUENCIES

Time-history combinations

Suppose

$$c_1 = P_1^2 z_1 = P_1^2 u \tag{33}$$

and

$$c_2 = P_2^2 z_2 = P_2^2 u \tag{34}$$

are the responses of two oscillators to a support motion u(t). If the two frequencies are the same, $P_1 = P_2 = P$, the time histories will be identical and the peak accelerations will occur simultaneously.

As the accelerations are scaled by participation factor and by modeshape, and then used to calculate forces, stresses, and deformations, the peaks will remain coincident in time but may represent responses of different magnitude occurring in either the same or opposite directions. The combined peak is given by the algebraic sum of the individual peak values.

NRL Sum

If Modes 1 and 2 are the only two modes of the structure, the NRL Sum will add their peak stresses and deformations by absolute value (absolute value of the larger plus square root of the square of the smaller). This is an appropriate combination if both responses are in the same direction, but it may be a very large overestimate if the modes actually produce responses in the opposite directions.

If the structure has more than two modes, either or both of Modes 1 and 2 may be part of the square root of the sum of the squares in the NRL Sum. Here their combined response will be underestimated if they respond in the same direction, and will be overestimated if they respond in opposite directions.

Special rule

Modes with identical frequencies should have their peak responses added algebraically rather than by NRL Sum.

CLOSELY-SPACED MODES

Duhamel's integral

Formal solutions for Equations 33 and 34 can be written

$$c_1 = P_1^2 \int_0^t v(t) \cos[P_1(t - t)] \, dt \tag{35}$$

and

$$c_2 = P_2^2 \int_0^t v(t) \cos[P_2(t - t)] \, dt \tag{36}$$

where

$$v = \frac{du}{dt} \tag{37}$$

is the velocity of the support.

Time-history combinations

When the two accelerations are scaled by participation factor, modeshape, mass, and stress factor, they will produce a contribution

$$s(t) = D_1 \int_0^t v(t') \cos[P_1(t - t')] \, dt$$

$$+ D_2 \int_0^t v(t') \cos[P_2(t - t')] \, dt \tag{38}$$

to a particular stress, where D_1 and D_2 are combinations of all the relevant factors for the two modes.

If the frequencies are $P_1 = P - E$ and $P_2 = P + E$, with an average *frequency P and a difference of 2E, the stress can be written*

$$s(t) = (D_1 + D_2) \int_0^t v(t') \cos[E(t-t')] \cos[P(t-t')] \, dt$$

$$+ (D_1 - D_2) \int_0^t v(t') \sin[E(t-t')] \sin[P(t-t')] \, dt \tag{39}$$

Approximation for closely-spaced frequencies

If Et is less than $\pi/2$, the factors $\cos[E(t-t')]$ and $\sin[E(t-t')]$ can be treated as positive-valued windows applied to the velocity $v(t')$

with average values $\frac{\sin(Et)}{Et}$ and $\frac{1 - \cos(Et)}{Et}$ over the range of integration from 0 to t. The averages can be considered as weighting factors applied to the velocity of the support. The first average begins with a value of unity at the beginning of the response and decreases with increasing time, while the second begins at zero and increases.

A criterion

An Et of $\pi/4$ produces an average of 0.900 for the first window and an average of 0.373 for the second. For frequency differences and times up to this limit the stress may be approximated by

$$s(t) = (D_1 + D_2) \int_0^t v(t') \cos[P(t-t')] \, dt' , \qquad (40)$$

to reasonable accuracy. That is, both time histories approximate the response of an oscillator at the average frequency P and their combined stress is obtained from an algebraic sum of the factors D_1 and D_2, as was the case for identical frequencies.

If the frequency difference 2E is 5 Hertz, for example, Equation 40 can be used to estimate combined peak stresses for times up to 50 milliseconds after a transient motion of the support begins.

Further approximations

Convenience is served if the responses of modes having identical or closely-spaced frequencies are calculated independently in terms of their weights and frequencies. Then when peak responses are to be combined for stresses or deformations, peaks for pairs or clusters of modes having nearly the same frequency should be combined by algebraic sum to produce a single response. That response should be treated as the response of a single mode and combined with other responses by the NRL Sum.

Measurements and analyses of the responses of oscillators to torpedo impact against a submarine regularly show that peak responses occur less than 50 milliseconds after the initial impact. The

peak stresses and deformations from pairs or clusters of modes that fall within a 5-Hertz range can then be combined algebraically rather than by NRL Sum.

RULES OF THUMB

Suppression of the time histories is seen to require a number of fairly-arbitrary rules concerning selection of modes and methods of estimating peak values from combinations of responses.

The combination rules suggested here appear to be based on rational criteria. The rules were chosen mainly to avoid obviously-inappropriate results and are subject to revision and reinterpretation in light of statistical results from experimental data.

EXAMPLES

A TEXTBOOK EXAMPLE

Structure

Rigid masses weighing 325 pounds and 200 pounds are supported by springs having stiffnesses of 10,000 and 30,000 pounds per inch, as shown in Figure 1. Each mass is prevented from rotating by a set of roller guides that are not considered part of the supporting structure. The masses are connected by a thin and massless beam 30 inches long. The cross-section of the beam has an area moment of inertia of 1.25 in^4 and the beam is made of a material with elastic modulus 30 million pounds per square inch.

The structure is devised to illustrate the calculations; it is not intended to represent anything realistic.

Mass matrix

For coordinates $x_1(t)$ and $x_2(t)$ representing displacements of the masses, the mass matrix is

$$\mathbf{M} = \begin{bmatrix} 325 & 0 \\ 0 & 200 \end{bmatrix} \text{ pounds.} \tag{41}$$

Stiffness matrix

Moving x_1 by one inch and holding all the other coordinates fixed requires a force of 10,000 pounds to stretch the spring and an additional force of

$$\frac{12\ (30E6)\ 1.25}{(30)^3} = 16{,}666.67 \text{ pounds} \tag{42}$$

to bend the beam as a double cantilever. An equal and opposite force must be applied to x_2 to keep the other end of the beam from moving

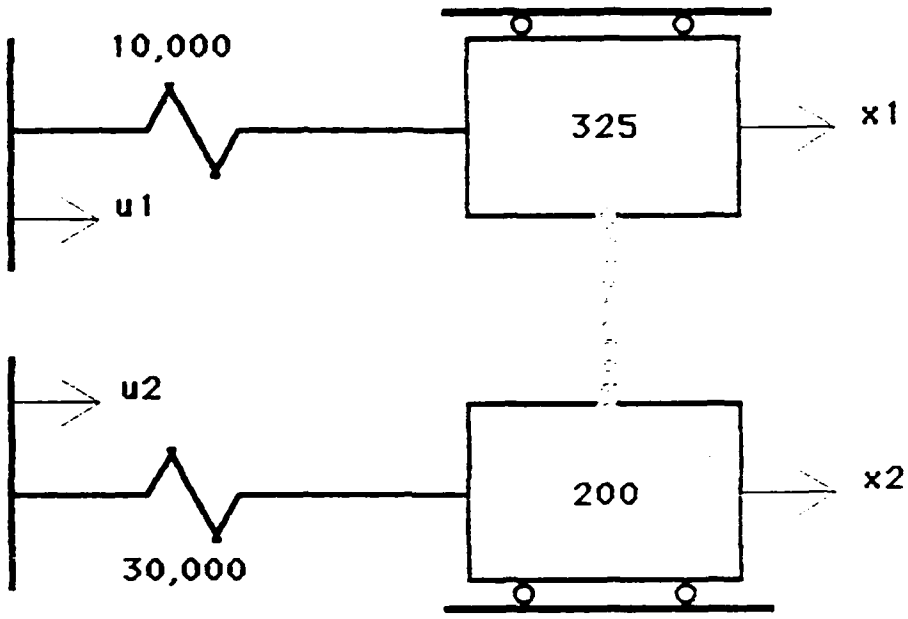

Figure 1. Textbook structure. Rigid masses are labeled in pounds. Massless springs are labeled in pounds per inch. The masses are connected by a massless thin beam 30 inches long with area moment 1 25 inches to the fourth power and elastic modulus 30 million pounds per square inch. The masses are on frictionless guides that prevent them from rotating.

Here and in the following the usual computer notation of E6 is used, for example, to indicate multiplication by 10 to the 6th power.

Moving x_2 while the other coordinates are held fixed stretches its spring and also bends the beam. The forces from unit displacement of one coordinate at a time can be assembled into the stiffness matrix

$$\mathbf{K} = \begin{bmatrix} 26666.67 & -16666.67 \\ -16666.67 & 46666.67 \end{bmatrix} \text{ pounds per inch.} \qquad (43)$$

Support stiffness

A one-inch displacement of u_1 (with everything else held fixed) will put a force of 10,000 pounds onto x_1. A similar displacement of u_2 will put a force of 30,000 pounds onto x_2. The support-stiffness matrix becomes

$$\mathbf{F} = \begin{bmatrix} 10000 & 0 \\ 0 & 30000 \end{bmatrix} \text{ pounds per inch.} \qquad (44)$$

Equation of motion

The three matrices **M**, **K**, and **F** allow the structure to be described by the force-balance equation $\mathbf{Ma} + \mathbf{Kx} = \mathbf{Fu}$, shown earlier as Equation 1 in the section on "Theory."

Diagonalizing the matrices

The next step in the analysis is to find a matrix Q that will make $\mathbf{Q}^T\mathbf{MQ}$ be a unit matrix and also make $\mathbf{Q}^T\mathbf{KQ}$ be a diagonal matrix, as shown in Equations 3 and 4. This can be done most easily by using an available computer program, such as in the example shown as Case 1 in Appendix B. For the simple structure here, the modeshape matrix Q can be calculated by hand, using the formula listed in Line 4120 of the computer program to normalize on the masses and the formulas beginning on Line 5610 to diagonalize the stiffnesses. The modeshape matrix

$$\mathbf{Q} = \begin{bmatrix} 0.05198516 & -0.01935114 \\ 0.02466795 & 0.06626833 \end{bmatrix} \tag{45}$$

is from a 10-digit pocket calculator. A direct check shows that it reduces

$$\mathbf{Q}^T \mathbf{M} \mathbf{Q} = \begin{bmatrix} 1.000 & 0.000 \\ 0.000 & 1.000 \end{bmatrix} = \mathbf{I} \tag{46}$$

to the unit matrix and

$$\mathbf{Q}^T \mathbf{K} \mathbf{Q} = \begin{bmatrix} 57.717 & 0.000 \\ 0.000 & 257.668 \end{bmatrix} = \mathbf{P}^2 \tag{47}$$

to a diagonal matrix.

The matrix $\mathbf{Q}$ can be used to represent the accelerations and displacements of the structure in terms of normal-mode coordinates by $\mathbf{a} = \mathbf{Q}\mathbf{b}$ and $\mathbf{x} = \mathbf{Q}\mathbf{y}$, as shown in Equation 5.

Participation factor

The participation-factor matrix is

$$\mathbf{P}^{-2} \mathbf{Q}^T \mathbf{F} = \begin{bmatrix} 9.007 & 12.821 \\ -0.751 & 7.716 \end{bmatrix} = \mathbf{R}^T \tag{48}$$

The participation factor lets the equation for the normal-mode coordinates be written in the standard form $\mathbf{b} + \mathbf{P}^2\mathbf{y} = \mathbf{P}^2\mathbf{R}^T\mathbf{u}$ (Equation 7). Each element of $\mathbf{R}^T\mathbf{u}$ is the effective displacement of the base of one of the normal-mode oscillators.

Modal weights

Add along the rows of the participation-factor matrix by absolute value and square the result to obtain

$$(9.007 + 12.821)^2 = 476 \text{ pounds} \tag{49}$$

for Mode 1 and

$$(0.751 + 7.716)^2 = 72 \text{ pounds} \tag{50}$$

for Mode 2. This is the new procedure of the RIDDAM, as shown by example in Equation 14.

Mode frequencies

When masses are in pounds and stiffnesses in pounds per inch, frequencies are given by the formulas

$$\frac{1}{2\pi}\sqrt{386\ (57.717)} = 23.8 \text{ Hertz} \tag{51}$$

and

$$\frac{1}{2\pi}\sqrt{386\ (257.668)} = 50.2 \text{ Hertz} \tag{52}$$

for Modes 1 and 2. The normal-mode equations for motionless supports, $\mathbf{b} + \mathbf{P}^2\mathbf{y} = 0$, identify the diagonal elements of $\mathbf{P}^2$ as squares of the fixed-base natural frequencies of the modes. The factor of 386 is the acceleration of gravity in inches per second per second, as needed in the inch-pound-second system when pounds are used for both masses and forces.

Inputs

The weights and frequencies of the modes serve as entries to tables showing the peak accelerations of the modes. As an example, suppose that the tables specify a peak acceleration of 26 times the acceleration of gravity (g) for a weight of 476 pounds and a frequency of 23.8 Hertz, and an acceleration of 119 g for 72 pounds at 50.2 Hertz. These are values at the point of impact for a torpedo. At a point on the hull 30 inches away from the point of impact the response accelerations would be 11.70 g and 53.55 g. These values represent peak accelerations of oscillators of mass M and fixed-base frequency P

measured during tests with torpedo impacts or calculated from Equation 15 during a computer simulation of an impact.

Peak accelerations of the modes

If the torpedo impacts in way of u_1, with u_2 located 30 inches away from the impact, the peak accelerations of the modes are obtained by multiplying the tabulated responses by the participation factors, or

$$9.007\,(26) + 12.821\,(11.70) = 384.19\ g \tag{53}$$

for Mode 1 and

$$-0.751\,(119) + 7.716\,(53.55) = 323.82\ g \tag{54}$$

for Mode 2.

Equations 53 and 54 correspond to applying the participation factors to the predetermined responses, rather than applying the participation factors to the support motions and then calculating the responses. The two procedures give equivalent results for time-history calculations, as explained in Equations 16 and 17. The same combination method is recommended for peak values in Equation 30 if the time histories have been suppressed.

Peak accelerations of the masses

Scale the shape for the first mode (the first column of **Q**) by 384.19 and the shape for the second mode by 323.82 to obtain

$$\mathbf{A} = \begin{bmatrix} 19.97 & -6.27 \\ 9.48 & 21.45 \end{bmatrix} g \tag{55}$$

as the peak accelerations of the masses in each mode. The first column of **A** shows the peak accelerations of x_1 and x_2 in Mode 1 and the second column shows their peak responses in Mode 2. Peak accelerations are shown separately for each mode, as recommended in Equation 31.

Forces

Multiply the masses (pounds) and the accelerations (g) to find

$$\mathbf{M\,A} = \begin{bmatrix} 6490 & -2038 \\ 1896 & 4290 \end{bmatrix} \text{ pounds} \tag{56}$$

as the peak forces that were applied to each mass in each mode.

Stresses and deformations

Each mode is treated as a static problem to check for stresses and deformations at critical points on the structure. Suppose that the critical points are the bending moments at each end of the beam and the tensile loads applied to bolts restraining the springs. A redundant-structure analysis provides deflections

$$\mathbf{X} = \begin{bmatrix} 0.3460 & -0.0243 \\ 0.1642 & 0.0832 \end{bmatrix} \text{ inches} \tag{57}$$

for each mass in each mode when the forces of Equation 56 are applied as static forces to the structure. The deflections produce forces of 3460 pounds at u_1 in Mode 1 and -243 pounds in Mode 2. At u_2 the forces are 4926 pounds in Mode 1 and 2496 pounds in Mode 2.

Warping

Relative motions between the supports will distort the structure through its redundant supports. Suppose, for example, that the warping formulas specify a displacement of 0.200 inch at the impact point and a displacement of 0.090 inch a distance of 30 inches from the impact point. A redundant-structure analysis shows that x_1 will have an equilibrium displacement of 0.1431 inch and x_2 a displacement of 0.1090 inch under these support displacements. The resulting tensions in the hold-down bolts are -569 pounds at Support 1 and an equal and opposite 569 pounds at Support 2.

NRL Sum

Loads on the supports are to be combined by NRL Sum, subject to the selection rules described earlier under "Application." The forces from warping and two modes (assuming no operating stresses) combine by the rule of the largest plus square root of the sum of the squares in the form

$$3460 + \sqrt{(-243)^2 + (-569)^2} = 4079 \text{ pounds} \qquad (58)$$

as an estimate of the peak force applied to the bolts at u_1, and

$$4926 + \sqrt{(2496)^2 + (569)^2} = 7486 \text{ pounds} \qquad (59)$$

for the bolts at u_2.

Continuing

The peak forces of Equations 58 and 59 are interpreted as applying in either direction to the hold-down bolts. The bolts need to be tight enough so that the peak force, applied in tension, will not cause the joint to separate. Similar calculations allow peak moments at the ends of the beam to be estimated for comparison with allowable moments.

The calculations need to be repeated for a case in which a torpedo impacts in way of u_2 rather than u_1. The most severe conditions can be taken as those in which one of the supports for an item is directly inboard of the point of impact. Then a check of impacts at each support is sufficient to evaluate the ability of the equipment to withstand an impact at any point near it.

AN EXAMPLE WITH CROSS-AXIS RESPONSE

Structure

A point mass is supported by two equal springs battered at angles H above and below the horizontal, as shown in Figure 2. The mass can move both horizontally (x_1) and vertically (x_2) in response to

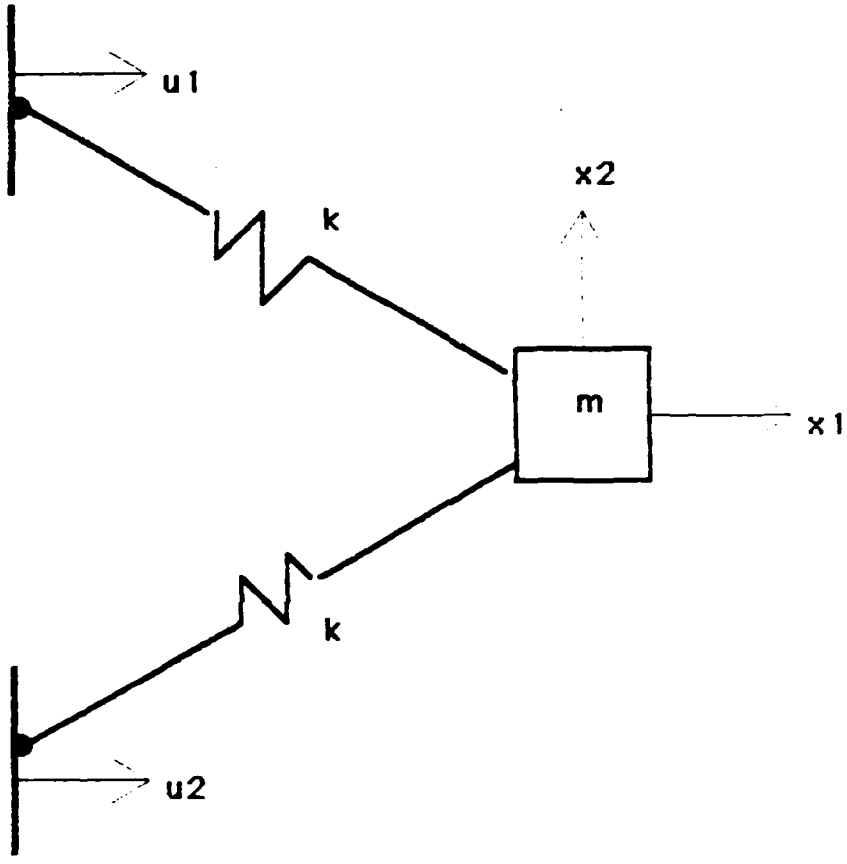

Figure 2. Structure with cross-axis response. Mass m is supported by two springs of stiffness k. Each spring slopes at an angle H from the horizontal. The dots represent pinned joints.

the horizontal motions of its two supports. This is another textbook example not intended to represent a realistic structure.

In this and in the following two examples the analysis is presented in a form parallel to that used for the first example, but without back-references to the sections of the report on theory or application. Please refer to corresponding sections of the first example for appropriate references.

Matrices

The mass matrix,

$$\mathbf{M} = \begin{bmatrix} m & 0 \\ 0 & m \end{bmatrix} \tag{60}$$

represents motion of the mass in either of the two orthogonal directions. The stiffness matrix

$$\mathbf{K} = \begin{bmatrix} 2\ k\ \cos^2(H) & 0 \\ 0 & 2\ k\ \sin^2(H) \end{bmatrix} \tag{61}$$

includes factors for the components of force and deflection in each spring produced by small displacements of the mass in each direction. The support-stiffness matrix

$$\mathbf{F} = \begin{bmatrix} k\ \cos^2(H) & k\ \cos^2(H) \\ -k\ \sin(H)\ \cos(H) & k\ \sin(H)\ \cos(H) \end{bmatrix} \tag{62}$$

shows the horizontal and vertical force per displacement on the mass produced by small horizontal displacements of each support.

Normal modes

The modeshape matrix

$$\mathbf{Q} = \begin{bmatrix} \sqrt{1/m} & 0 \\ 0 & \sqrt{1/m} \end{bmatrix} \tag{63}$$

normalizes the mass matrix to a unit matrix, gives a frequency-squared matrix

$$\mathbf{Q}^T \mathbf{K}\, \mathbf{Q} = \begin{bmatrix} 2\,(k/m)\,\cos^2(H) & 0 \\ 0 & 2\,(k/m)\,\sin^2(H) \end{bmatrix} \tag{64}$$

and a participation-factor matrix

$$\mathbf{P}^{-2}\, \mathbf{Q}^T \mathbf{F} = \begin{bmatrix} \sqrt{m}/2 & \sqrt{m}/2 \\ -(\sqrt{m}/2)\,\cot(H) & (\sqrt{m}/2)\,\cot(H) \end{bmatrix} \tag{65}$$

Modal weights

Mode 1 (horizontal motion) has effective mass m, as obtained from the squared sum of the first row of the participation-factor matrix. Mode 2 (vertical motion) has effective mass $m \cot^2(H)$, with the square of the cotangent representing the effect of the lever arms that act to magnify or diminish the effects of a vertical force on the horizontally-directed supports and also act to magnify or diminish the motions of the mass.

Warping

Relative horizontal motions between the two supports will simply displace the mass in the vertical direction without producing any stresses or deformations. (The joints at the supports are pinned.)

Interpretation

The simple example here shows that the matrix formalism is not limited to unidirectional responses. If cross-axis responses are expected from unequal motions of supports, they should be included in the model of the structure, and can be treated on the same basis as on-axis responses.

AN EXAMPLE WITH ROTATIONAL INERTIA

Structure

A steel plate is bridged between the flanges of two frames to carry a weight made from a stack of steel plates, as shown in Figure 3. Four structures like this were built, installed in hulls, and tested with torpedo impacts. The one analyzed here was tested in 1985 on the SITV (Submarine Impact Test Vehicle). There it served as simulated equipment for research purposes.

Bouncing

The structure was especially designed to be symmetric and nonredundant with two simple modes of vibration. In one mode the weight would translate as a rigid body and bend the plate as a beam. The stiffness of the plate (33 inches long, 22 inches wide, and 1 inch thick, with equal loads 6.5 inches from each end) can be obtained from handbook formulas as

$$\frac{12\ (28E6)\ 22\ (1)^3/12}{(6.5)^2\ [3(33)\ -\ 4(6.5)]} = 199{,}724 \text{ pounds per inch} \qquad (66)$$

The stack of plates (859 pounds) and the center 20 inches of the flexible plate (124 pounds) both participate in the bouncing motion, while the 6.5 inches at each end of the flexible plate connect from the fixed support to the moving load (say one-third of 81 pounds). A rough estimate of the total mass in the bouncing mode is thus 1010 pounds. The frequency should be

$$\frac{1}{2\pi}\sqrt{\frac{386\ (199724)}{1010}} = 44 \text{ Hertz} \qquad (67)$$

Analysis of measurements from the SITV test showed that the bouncing mode had a fixed-base frequency of 44 Hertz.

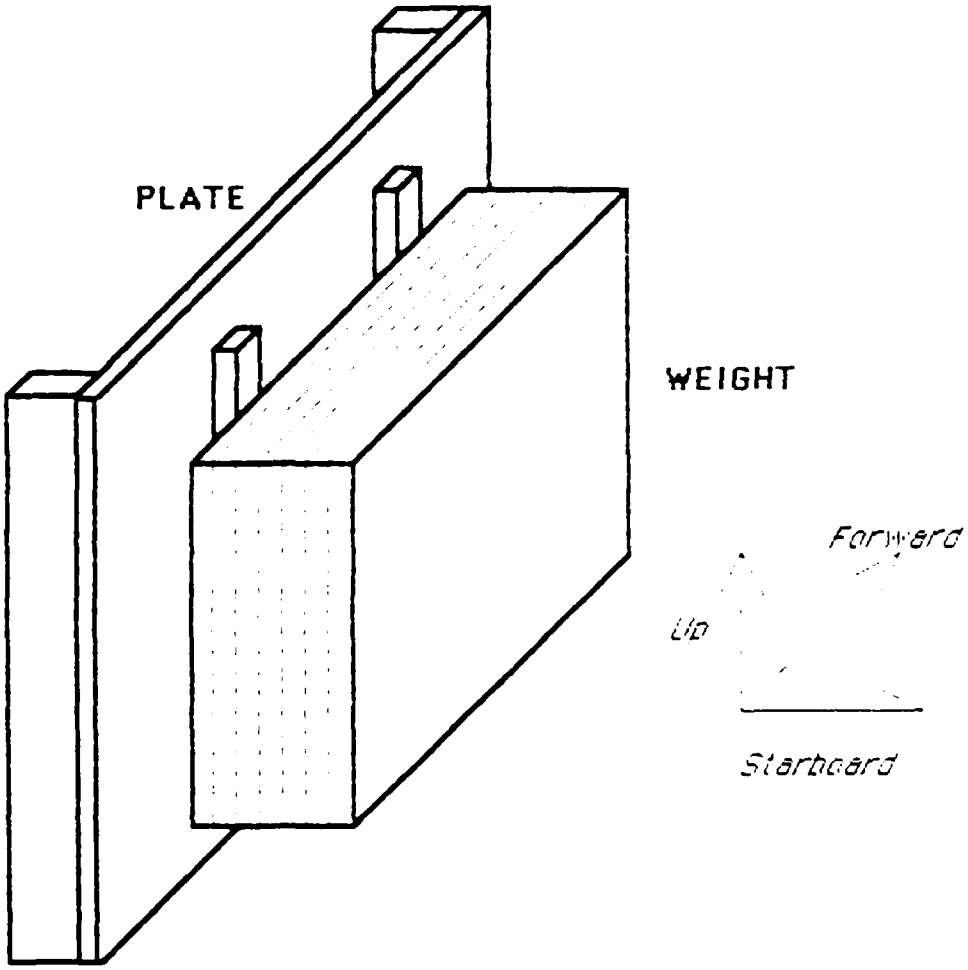

Figure 3 Structure with rotational inertia. The weight (a stack of steel plates) is bolted to a flexible plate that bridges between the flanges of two successive ring stiffeners of a submarine hull. Half-round spacers (not illustrated) provided nearly moment-free connections at the ends of the flexible plate and at the connections between the plate and the weight.

Rocking

If the weight rotates about an axis through the center of the plate and parallel to its ends, each half of the plate will bend as a simply-supported beam with a point load. Handbook formulas give the stiffness of each half as

$$\frac{3\ (28E6)\ [22\ (1)^3/12]\ 16.5}{(6.5)^2\ (16.5\ -\ 6.5)^2} = 601{,}420 \text{ pounds per inch.} \quad (68)$$

Two such loads are each 10 inches from the center of the plate, and a small rotation produces deflections of 10 inches per radian. The angular stiffness is thus 120.284 million pound-inches per radian.

The mass moment of inertia for rotations about an axis through the center of the plate can be obtained by starting with the moment about the center of gravity of the weight (a block 25.5 by 7 by 17 inches),

$$859\ \frac{(25.5)^2\ +\ (7)^2}{12} = 50{,}055 \text{ pound-in}^2. \quad (69)$$

Transfer to a parallel axis through the middle plane of the plate (9 inches from the center of gravity of the weight) by

$$859\ (9)^2 = 21{,}475 \text{ pound-in}^2, \quad (70)$$

and add an estimate for the center part of the plate,

$$124\ \frac{(20)^2\ +\ (1)^2}{12} = 4{,}142 \text{ pound-in}^2, \quad (71)$$

to obtain a total moment of inertia of 75,682 pound-in^2. Frequency is then

$$\frac{1}{2\pi}\sqrt{\frac{386\ (120.284E6)}{75682}} = 125 \text{ Hertz.} \quad (72)$$

Data from the test showed a fixed-base frequency of 1.37 Hertz for the rocking mode.

Matrices

The mass matrix,

$$\mathbf{M} = \begin{bmatrix} 1010 & 0 \\ 0 & 75682 \end{bmatrix} \tag{73}$$

contains a mass in pounds and a mass moment of inertia in pound-inches squared. The stiffness matrix,

$$\mathbf{K} = \begin{bmatrix} 199724 & 0 \\ 0 & 120.284E6 \end{bmatrix} \tag{74}$$

has elements in pounds per inch and in pound-inches per radian. The support-stiffness matrix

$$\mathbf{F} = \begin{bmatrix} 99862 & 99862 \\ 3.645E6 & -3.645E6 \end{bmatrix} \tag{75}$$

shows that a one-inch displacement of both supports would apply a force of 199,724 pounds to the translational coordinate. Displacements of +1 and -1 inch would cause a rotation of 1/16.5 radians and apply a moment of 120.284E6/16.5 pound-inches to the rotational coordinate.

Normal modes

The modeshape matrix

$$\mathbf{Q} = \begin{bmatrix} 31.46584E-3 & 0 \\ 0 & 3.63499E-3 \end{bmatrix} \tag{76}$$

normalizes the mass matrix to a unit matrix and gives a frequency-squared matrix

$$Q^T K Q = \begin{bmatrix} 197.746 & 0.000 \\ 0.000 & 1589.334 \end{bmatrix} = P^2 \tag{77}$$

that gives the frequencies of 44 and 125 Hertz.

Participation factor

The participation-factor matrix is

$$P^{-2} Q^T F = \begin{bmatrix} 15.8903 & 15.8903 \\ 8.3365 & -8.3365 \end{bmatrix} = R^T \tag{78}$$

Add along the rows by absolute value and square the sums to find that Mode 1 (bouncing) has effective weight 1010 pounds and Mode 2 (rocking) has effective weight 278 pounds.

Responses

From this point onward, the analysis proceeds in the usual fashion. The IDDAM inputs at each support for the first mode are obtained from its weight (1010 pounds), its frequency (44 Hertz), and the location of each support relative to the point of impact of the torpedo. Multiply each input by its factor from the first row of the participation-factor matrix and sum to find the acceleration of the mode. Scale the first column of the modeshape matrix by that acceleration to obtain the acceleration in the bouncing mode of response and continue to calculate forces, stresses, and deformations.

Calculations for the second mode will be similar except that its accelerations will be rotational accelerations in units of 386 radians per second squared. Multiply by the mass moment of inertia in pound-inches squared to obtain moment in pound-inches, and continue to calculate stresses and deformations from the applied moment.

Finally, the NRL Sum is used to combine stresses from the two modes with warping stresses and operating stresses to estimate peak stresses at critical points. The particular structure of the example had neither warping nor operating stresses. Checks were made for tensile

loads in the bolts, stresses in the flexible plate, and stresses in the welded brackets.

Interpretation

The example here shows that the formalism applies as well to rotational responses as it does to translations, with the rotations given in radians, stiffnesses represented by moments per radian, and masses represented by mass moments of inertia.

Alternate models using translations

Figure 4 shows four ways in which the two coordinates (one translation and one rotation) for the example could be replaced by a pair of translational coordinates. In each case the total mass of 1010 pounds is represented by point masses located so as to reproduce the mass moment of inertia about an axis through the center of the plate.

The case marked (a) is of special interest, since it shows that placing two weights of 139 pounds each directly over the support points not only gives the correct mass moment of inertia but provides a total of 278 pounds to match the effective mass of the rocking mode.

Each of the configurations in Figure 4 can be analyzed to produce results identical to the results obtained using a rotational coordinate.

A REAL EXAMPLE

Source

Figure 5 is adapted from a sketch in Appendix E of a report of engineering analyses of submarine equipment done by a Navy shipyard.[1] The figure shows a 4-cubic-foot airflask supported between two hull stiffeners by four beams built of quarter-inch steel

[1] M A Hattamer and M W Yargus, Analysis of MSW Cooling Pump & Piping and Miscellaneous Air Flasks using Dynamic Analysis Method for Impact Bremerton, Washington Puget Sound Naval Shipyard Engineering Document 449 (22 April 1977)

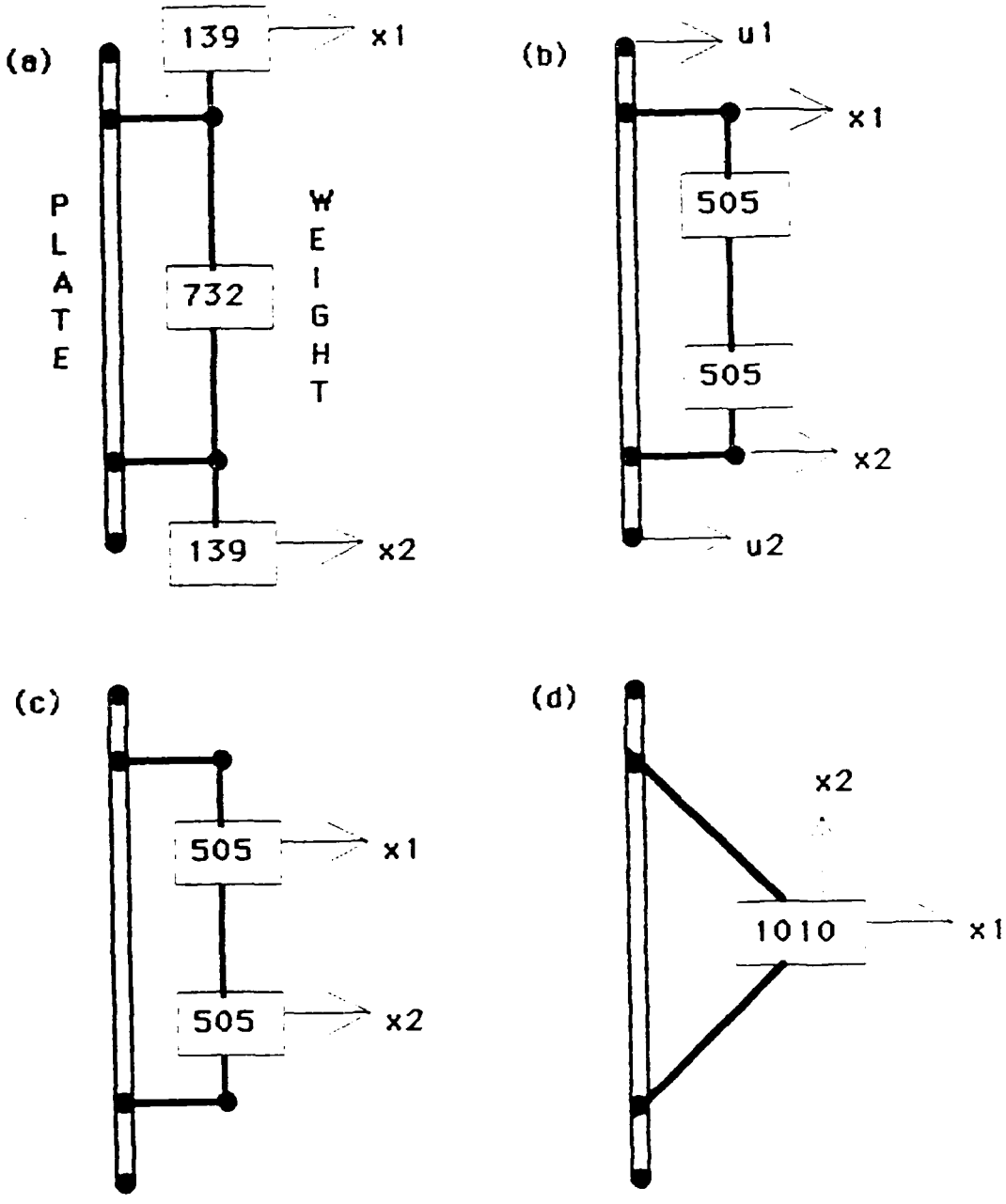

Figure 4. Representing rotations by pairs of translations. Rectangles are point masses, labeled with masses in pounds. Heavy single lines are rigid connectors; dots are pinned joints.

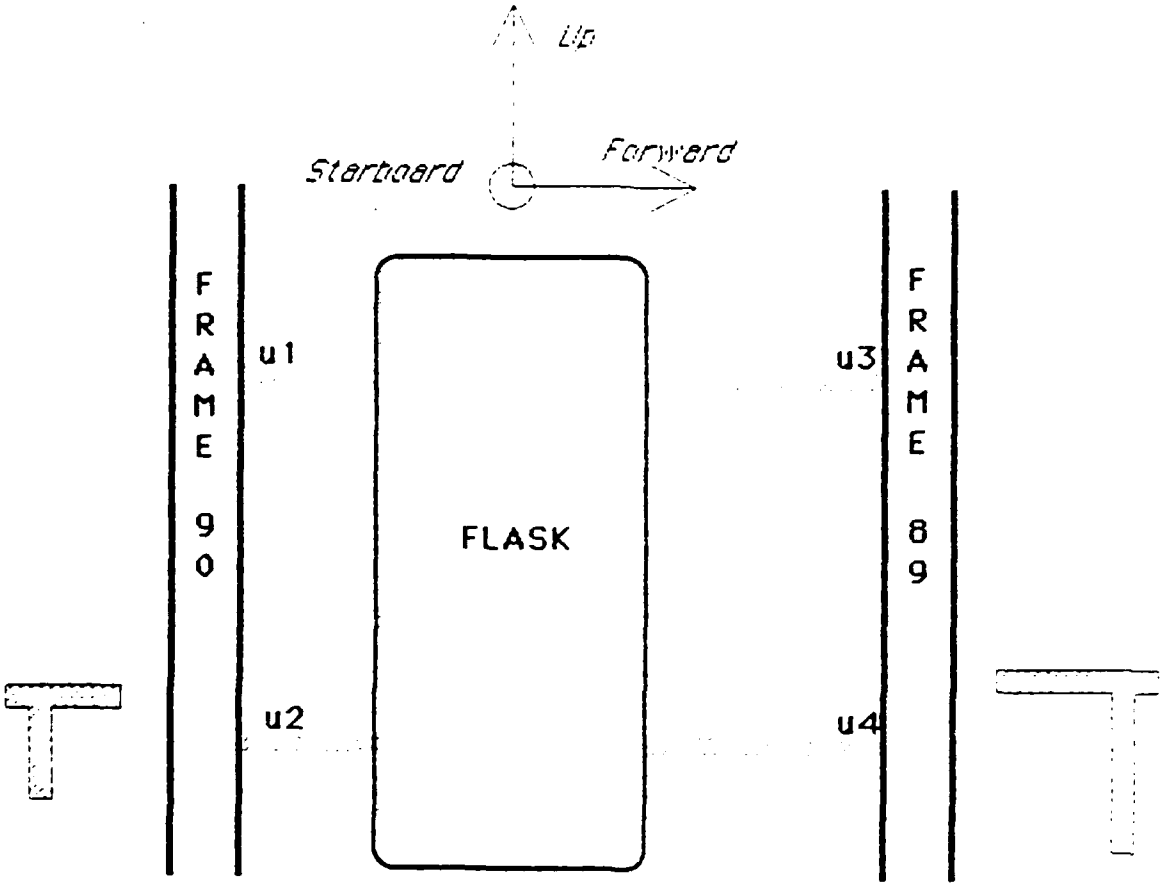

Figure 5. Sketch of model for an air flask. The flask is mounted between frames by four beams made of quarter-inch plate. Cross-sections of the beams are shown.

plate. Calculations from the analysis are summarized here with some changes in notation and revisions in procedures.

Coordinates

The airflask was taken to have three degrees of freedom, represented by an athwartship translation of the center of gravity (x_1), rotation about a vertical axis (x_2), and rotation about a fore-and-aft axis (x_3).

Mass matrix

Masses were represented in units of 386 pounds (slinches), as required by the computer program that was to be used to find normal modes. The mass for the translational motion was 1.17 slinches. The mass moment of inertia about the vertical axis (along the axis of the flask) was taken as that for a thin circular shell with radius 9 inches, or

$$1.17\,(9)^2 = 95 \text{ lb-in-s}^2. \tag{79}$$

The shell was taken as 42 inches long for its moment of inertia about the fore-and-aft axis, or

$$1.17\,\frac{6(9)^2 + 4(42)^2}{12} = 1.17\,(21)^2 = 219 \text{ lb-in-s}^2. \tag{80}$$

The mass matrix was thus

$$\mathbf{M} = \begin{bmatrix} 1.17 & 0 & 0 \\ 0 & 95 & 0 \\ 0 & 0 & 219 \end{bmatrix}. \tag{81}$$

Beams

The two beams connecting to Frame 90 were angles made of quarter-inch plate 4 inches long, 3 inches wide, and 6 inches deep. The cross-sectional area was 2.25 square inches and the area moment

about the neutral axis was 9.4 in^4. Their bending stiffness as cantilevers fixed to the frame and pinned to the flask would be

$$3\,\frac{30E6(9.4)}{(4)^3} = 13.2 \text{ million lb/in.} \tag{82}$$

Shear stiffness (neglecting any shear factor) would be

$$\frac{2.25(11E6)}{4} = 6.2 \text{ million lb/in.} \tag{83}$$

giving a combined stiffness of

$$\frac{13.2(6.2)}{13.2 + 6.2} = 4.2 \text{ million lb/in} \tag{84}$$

for each beam.

The two beams connected to Frame 89 were 12 inches long, 3 inches wide, and 11 inches deep, with area 3.5 square inches and an area moment of 46.4 in^4. The combined stiffness in bending and shear was

$$\frac{2.4(3.2)}{2.4 + 3.2} = 1.4 \text{ million lb/in} \tag{85}$$

Stiffness matrix

All four beams act against an athwartship displacement of the flask, producing a stiffness of 11.2 million pounds per inch for Coordinate 1. The beams are attached 7 inches forward and 7 inches aft of the centerline of the flask, so that when the flask is rotated about a vertical axis they apply a moment of 548.8 million pound-inches per radian to Coordinate 2. Moment arms for rotation about a fore-and-aft axis are 12 inches above and below the center of the flask for a stiffness of 1612.8 million pound-inches per radian in Coordinate 3.

In addition, when the flask is displaced to starboard (out of the paper in Figure 5) the beams will apply a moment about the vertical axis of

$$(-4.2-4.2)(7) + (-1.4-1.4)(-7) = -39.2 \text{ million lb-in/in} \qquad (86)$$

that must be reacted by an equal and opposite moment to keep the flask from rotating. Similarly, rotation about the vertical axis will produce a net force per angle of 39.2 million pounds per radian to port that must be reacted by an equal force to starboard to keep the flask from translating. The stiffness matrix needs to be written as

$$\mathbf{K} = \begin{bmatrix} 11.2E6 & 39.2E6 & 0 \\ 39.2E6 & 548.8E6 & 0 \\ 0 & 0 & 1612.8E6 \end{bmatrix} \qquad (87)$$

Support stiffness

A displacement of Frame 90 in the starboard direction at the upper support (u_1) will apply 4.2 million pounds of force per inch of displacement to Coordinate 1. The force acts through a moment arm of 7 inches to apply 29.4 pound-inches of moment per inch of displacement to Coordinate 2, and acts through a moment arm of 12 inches to apply 50.4 million pound-inches per inch to Coordinate 3.

Similar calculations for the other three supports lead to a support-stiffness matrix

$$\mathbf{F} = \begin{bmatrix} 4.2E6 & 4.2E6 & 1.4E6 & 1.4E6 \\ 29.4E6 & 29.4E6 & -9.8E6 & -9.8E6 \\ 50.4E6 & -50.4E6 & 16.8E6 & -16.8E6 \end{bmatrix} \qquad (88)$$

Normal modes

Data were entered into Computer Program RGGG1 using the special format it required. The program returned three modes with natural frequencies 298, 424, and 536 Hertz. It provided a modeshape matrix.

$$\mathbf{QS} = \begin{bmatrix} 1. & 0. & 1. \\ 0.185 & 0. & -0.066 \\ 0. & 1. & 0. \end{bmatrix}, \tag{89}$$

that had been scaled to make the largest element in each column have a value of unity.

Program RGGG1 did not display the scale factors that it used. They were recalculated by hand in a tabulation scheme that was equivalent to

$$\mathbf{S}^2 = (\mathbf{QS})^T \mathbf{M}\, \mathbf{QS} = \begin{bmatrix} 4.42 & 0 & 0 \\ 0 & 219 & 0 \\ 0 & 0 & 1.58 \end{bmatrix}. \tag{90}$$

The original analysis continued with rounded calculations to remove the squares of the scale factors from individual results as they appeared. The following calculations depart from that method to remove the scale factors from the modeshape matrix directly by dividing each column by the square root of its element of $\mathbf{S}^2$, to obtain

$$\mathbf{Q} = \begin{bmatrix} 0.476 & 0.000 & 0.796 \\ 0.088 & 0.000 & -0.053 \\ 0.000 & 0.068 & 0.000 \end{bmatrix}. \tag{91}$$

<u>Alternate calculation</u>

A recalculation of the normal modes was made using a 10-digit pocket calculator to obtain a mass-normalized modeshape matrix directly as

$$\mathbf{Q} = \begin{bmatrix} 0.483 & 0.000 & 0.788 \\ -0.087 & 0.000 & 0.054 \\ 0.000 & 0.068 & 0.000 \end{bmatrix}. \tag{92}$$

Differences in the third significant figure between this modeshape matrix and the rescaled matrix from RGGG1 appear to result from

rounding of the scaled modeshapes in Equation 89.. Frequencies of the modes are given as 298, 432, and 548 Hertz from the revised analysis.

The signs are reversed for rotation about the vertical axis in Equation 92 because the data were entered into RGGG1 using a left-handed coordinate system. (Direction x pointed aft, y upward, and z to starboard.)

The modeshape matrix from Equation 92 has been used in the following calculations.

Participation factor

The participation factor is

$$\mathbf{R}^T = \mathbf{P}^{-2}\,\mathbf{Q}^T\,\mathbf{F} = \begin{bmatrix} -0.156 & -0.156 & 0.438 & 0.438 \\ 0.462 & -0.462 & 0.154 & -0.154 \\ 0.412 & 0.412 & 0.049 & 0.049 \end{bmatrix} \qquad (93)$$

Modal weights

Sum each row of the participation-factor matrix by absolute value and square the sums to find modal masses in the units of 386 pounds used in the mass matrix. Multiply by 386 to find modal weights of 550 pounds for Mode 1, 587 pounds for Mode 2, and 328 pounds for Mode 3.

IDDAM inputs

One of the IDDAM tables, used for the sake of an example, shows that, at the point of impact, a weight of 550 pounds mounted at 298 Hertz would respond with a peak acceleration of 1264 g. A weight of 587 pounds at 432 Hertz would respond to 1431 g, and 328 pounds at 548 Hertz would respond to 2297 g.

One frame away from the impact point the responses would be 0.45 times as large, and at a distance of 24 inches around a frame from the impact point the responses would be 0.60 times as large

Accelerations

If a torpedo were to strike in way of the upper support at the after frame (support u_1), the IDDAM inputs for the four supports, multiplied by the participation factors, predict peak accelerations for the three modes of

$$\mathbf{B} = \begin{bmatrix} 84 & 0 & 0 \\ 0 & 304 & 0 \\ 0 & 0 & 1596 \end{bmatrix} \tag{94}$$

The scaled modeshape matrix is

$$\mathbf{A} = \mathbf{Q}\,\mathbf{B} = \begin{bmatrix} 40 & 0 & 1259 \\ -7 & 0 & 86 \\ 0 & 21 & 0 \end{bmatrix} \tag{95}$$

with accelerations in g for the translational coordinate (first row of the matrix) and angular accelerations in multiples of 386 radians per second per second for the rotational coordinates (second and third rows).

Forces and moments

Multiply

$$\mathbf{G} = 0.386\,\mathbf{M}\,\mathbf{A} = \begin{bmatrix} 18 & 0 & 568 \\ -269 & 0 & 3136 \\ 0 & 1739 & 0 \end{bmatrix} \tag{96}$$

to obtain peak forces (thousands of pounds) applied to Coordinate 1 and peak moments (thousands of pound-inches) applied to Coordinates 2 and 3 in each of the three modes. (The factor of 0.386 is needed to return the mass matrix to convenient units.)

Static analysis

The force and moment from Mode 1 place a load of -5 thousand pounds on each of the two after supports, and a load of 14 thousand pounds on each of the forward supports.

The moment from Mode 2 applies a load of 36 thousand pounds to each of the upper supports and -36 thousand pounds to each of the lower supports.

Mode 3 puts loads of 254 thousand pounds on each after support and 30 thousand pounds on each forward one.

Warping

Suppose that the warping formula gives a displacement 0.200 inch at the impact point (u_1), 0.120 inch at u_2, 0.090 inch at u_3, and 0.054 inch at u_4. The static formula for the motion of the airflask can be solved most easily by writing it in the form

$$\mathbf{x} = \mathbf{K}^{-1}\,\mathbf{F}\,\mathbf{u} = (\mathbf{Q}\,\mathbf{P}^{-2}\,\mathbf{Q}^{T})\,\mathbf{F}\,\mathbf{u} = \mathbf{Q}\,\mathbf{R}^{T}\,\mathbf{u} \tag{97}$$

that avoids inverting the stiffness matrix. The equilibrium positions of the coordinates are

$$\mathbf{x} = \begin{bmatrix} 0.116000 \\ 0.006286 \\ 0.002875 \end{bmatrix} \tag{98}$$

The displacement (translation and two rotations) at support u_1 is 0.194502 inch, deflecting the beam there by 0.005498 inch and producing a force of 23 thousand pounds. Similar calculations show balancing forces of -23 thousand pounds at u_2, -23 thousand pounds at u_3, and +23 thousand pounds at u_4.

Stress analysis

The outermost fibers of the beams at Frame 90 were 4 inches from the neutral axis and would have stress

$$4\frac{4}{9.4} = 1.702 \tag{99}$$

psi in bending per pound of force applied at the end of the beam. Shear stress would be

$$\frac{1}{2.5} = 0.400 \tag{100}$$

psi per pound.

The beams at Frame 89 had their outermost fibers 6 inches from the neutral axis, with stress 1.733 psi per pound there in bending, and with shear stress 0.286 psi per pound.

NRL Sum

The upper aft beam (u_1) has loads, in thousands of pounds, of -5 (Mode 1), 36 (Mode 2), 254 (Mode 3), and 23 (warping). Bending stresses are -9, 62, 433, and 39 thousand pounds per square inch. The NRL Sum of the bending stresses is

$$433 + \sqrt{(-9)^2 + (62)^2 + (39)^2} = 507 \text{ thousand psi.} \tag{101}$$

Shear stresses are -2, 14, 102, and 9 thousand pounds per square inch, with an NRL Sum of 119 thousand psi.

Check

The calculation might as well stop here (as it did in the original) because there is no chance that the support at the impacted frame could withstand the bending stress of 507 thousand pounds per square inch or the shear stress of 119 thousand pounds per square inch. The bending stress is more than ten times the yield stress for a medium steel and the shear stress is more than four times yield in shear. A redesign of the supports for the airflask is obviously needed.

APPENDIX A
A SHORT INTRODUCTION TO MATRIX ALGEBRA

MATRICES

A computer statement similar to

DIMENSION M(4,5) (A-1)

will reserve 20 memory spaces for numbers that can thereafter be referenced as M(J,L), with J an integer in the range from 1 to 4 and L an integer in the range from 1 to 5. The numbers are usually thought of as arranged in a rectangular array with four rows and five columns, designated simply by the letter **M**:

$$\mathbf{M} = \begin{bmatrix} M(1,1) & M(1,2) & M(1,3) & M(1,4) & M(1,5) \\ M(2,1) & M(2,2) & M(2,3) & M(2,4) & M(2,5) \\ M(3,1) & M(3,2) & M(3,3) & M(3,4) & M(3,5) \\ M(4,1) & M(4,2) & M(4,3) & M(4,4) & M(4,5) \end{bmatrix} \qquad \text{(A-2)}$$

SOME DEFINITIONS

The matrix with dimension M(4,5) is called a *rectangular matrix* because it has a different number of rows than columns. A matrix with dimension M(4,4) would be called a *square matrix*. The elements M(J,J) are called the *diagonal elements*; they would be the elements M(1,1), M(2,2), M(3,3), and M(4,4) for the matrix here.

The sum of the diagonal elements is called the *trace* of the matrix; the trace of the matrix here would be M(1,1) + M(2,2) + M(3,3) + M(4,4). A *symmetric matrix* is one in which every M(J,L) is equal to the corresponding M(L,J) - that is, M(1,2) = M(2,1), M(1,3) = M(3,1), and so on for all the pairs.

SOME OPERATIONS

If matrix **Q** has elements Q(J,L), the matrix with elements Q(L,J) is called the *transpose* of **Q**, designated by $\mathbf{Q}^T$. Transposition corresponds to interchanging rows and columns in the array. If the

transposed matrix is equal to the original matrix ($Q^T = Q$), then the matrix must have been both square and symmetric.

Matrices of the same dimension are added or subtracted by adding or subtracting the corresponding elements. Matrices of different dimensions cannot be added to or subtracted from one another.

MATRIX MULTIPLICATION

The product of two matrices is written as if it were ordinary multiplication. That is,

$$\mathbf{Z} = \mathbf{M}\,\mathbf{Q} \tag{A-3}$$

is the product of **M** and **Q**. The operation is not an element-by-element multiplication, however, but involves multiplying each element in a row of the first matrix by the corresponding element in a column of the second matrix and summing the products. Each element of **Z** is generated as

$$Z(J,N) = M(J,1)\,Q(1,N) + M(J,2)\,Q(2,N) + M(J,3)\,Q(3,N) + M(J,4)\,Q(4,N) + \ldots \tag{A-4}$$

The equation can be abbreviated as

$$Z(J,N) = M(J,L)\,Q(L,N), \tag{A-5}$$

where it is understood (the *summation convention*) that the product is to be summed over all possible values of the repeated index L.

The product matrix **Z** will have as many rows as there were rows in **M**, and as many columns as there were columns in **Q**. Moreover, **M** must have exactly as many columns as **Q** has rows, so that the index L can be assigned to both and run through a single range of values.

Because of the rule for multiplication, it is not surprising that the matrix product **QM** is a different matrix from the product **MQ**.

MORE DEFINITIONS

A *diagonal matrix* is one in which all of the elements other than the diagonal elements have values of zero. A *unit matrix* (usually designated by **I**) is a diagonal matrix in which each diagonal element has a value of unity.

The *inverse* of a matrix **K** is the matrix $\mathbf{K}^{-1}$ that makes

$$\mathbf{K}^{-1}\,\mathbf{K} = \mathbf{I} \tag{A-6}$$

be a unit matrix. Not all matrices have inverses. The definition of an inverse is reciprocal; **K** is also the inverse of $\mathbf{K}^{-1}$ so that

$$\mathbf{K}\,\mathbf{K}^{-1} = \mathbf{I}. \tag{A-7}$$

If the transpose of a matrix is also its inverse, the matrix is said to be *unitary*. That is,

$$\mathbf{U}^{T}\,\mathbf{U} = \mathbf{I} \tag{A-8}$$

defines **U** as a unitary matrix. A simple example is

$$\mathbf{U} = \begin{bmatrix} \cos(H) & -\sin(H) \\ \sin(H) & \cos(H) \end{bmatrix} \tag{A-9}$$

which is unitary for any angle H.

VECTORS

A matrix with only one column is called a *column vector*. If a matrix **X** has dimension X(5,1), for example, it is a column vector with five elements. It is usual to suppress the unit designation and show its dimension as X(5). Column vectors are designated by lower-case boldface letters, such as **x**, in the present report.

A matrix with only one row is called a *row vector*. It is dimensioned X(1,5), for example, and is designated here using the symbol for transpose, $\mathbf{x}^{T}$. Again the unit designation is usually

suppressed to show a row vector as dimension X(5), although this has the defect of not distinguishing it from a column vector.

All of the rules for adding, subtracting, and multiplying matrices apply to vectors provided the unit dimension is understood.

SOME HELPFUL RELATIONS

The following rules can be verified by working out some simple examples. First, the transpose of a matrix product is obtained from the transposes of the factors taken in the reverse order, or

$$(\mathbf{MQ})^T = \mathbf{Q}^T \mathbf{M}^T. \tag{A-10}$$

Similarly, the inverse of a product involves inverting and interchanging the factors, as

$$(\mathbf{MQ})^{-1} = \mathbf{Q}^{-1} \mathbf{M}^{-1}. \tag{A-11}$$

If a matrix is symmetric, its inverse is also symmetric. However, the product of two symmetric matrices, such as $\mathbf{M}^{-1}$ and $\mathbf{K}$, is not a symmetric matrix, since

$$(\mathbf{M}^{-1} \mathbf{K})^T = \mathbf{K}^T \mathbf{M}^{-T} = \mathbf{K} \mathbf{M}^{-1} \tag{A-12}$$

is different from the original product $\mathbf{M}^{-1} \mathbf{K}$

Both the mass and stiffness matrices $\mathbf{M}$ and $\mathbf{K}$ for a structure are necessarily symmetric. If a stiffness matrix were not symmetric, for example, the structure could be run as a perpetual-motion machine by moving it around a cycle in which the smaller off-diagonal element was worked during the compression phase and the larger offdiagonal element was used to provide power during the return stroke.

Matrix elements for a structure can often by generated or checked by using the useful relations that $\mathbf{x}^T \mathbf{K} \mathbf{x}/2$ is the potential (or strain) energy and $\mathbf{v}^T \mathbf{M} \mathbf{v}/2$ is the kinetic energy, where $\mathbf{x}$ is a column vector of displacements and $\mathbf{v}$ a column vector of velocities.

USEFULNESS OF MATRIX ANALYSIS

The rules for addition, subtraction, and multiplication of matrices were chosen specifically so that matrix equations very similar to scalar equations, such as

$$\mathbf{M}\,\mathbf{a} + \mathbf{K}\,\mathbf{x} = \mathbf{F}\,\mathbf{u}, \tag{A-13}$$

would expand into precisely the set of coupled differential equations needed to represent a structure with multiple coordinates. The great compaction of the notation and the resultant improvement in comprehension are exactly what is needed in analyzing complicated structures.

APPENDIX B
A COMPUTER PROGRAM FOR RIDDAM

PROGRAM

```
1000 REM THIS PROGRAM IS WRITTEN IN CORE BASIC

1100 REM IDENTIFY THE PROGRAM
1110 PRINT  "877F7 RIDDAM"
1120 PRINT  "   ACCEPTS A DIAGONAL MASS MATRIX IN"
1130 PRINT  "   POUNDS OR POUND INCHES SQUARED."
1140 PRINT  "   STIFFNESSES IN POUNDS PER INCH OR"
1150 PRINT  "   POUND-INCHES PER RADIAN."
1160 PRINT  "R L BORT, NAVAL RESEARCH LAB, WASHINGTON, DC"
1170 PRINT  "JULY 15, 1987."
1180 PRINT

1200 REM  DIMENSION THE VARIABLES
1210 DIM M(10,10), K(10,10), F(10,10)
1220 DIM Q(10,10), P(10,10), R(10,10)
1230 DIM F1(10), W(10), D(10), F2(10),B(10)
1240 DIM A(10,10),G(10,10)

1300 REM CASE NUMBER OR TEST CASE
1310 PRINT "ENTER A NUMBER FOR YOUR CASE, OR"
1320 PRINT "ENTER 0 (ZERO) TO RUN A TEST CASE."
1330 INPUT T
1340 IF T>0 THEN 1410
1350 PRINT "CASE 0 IS A 1000-POUND BAR SUPPORTED"
1360 PRINT "INDEPENDENTLY AT EACH END.  IT IS MODELED AS"
1370 PRINT "N1 EQUAL MASSES WITH N1+1 EQUAL SPRINGS."
1380 PRINT
```

```
1400 REM ASSIGN DEGREES OF FREEDOM
1410 PRINT "ENTER DEGREES OF FREEDOM (1 TO 10)"
1420 INPUT N1
1430 IF N1<1 THEN 1410
1440 IF N1>10 THEN 1410

1500 REM  CLEAR SOME MATRICES
1510 FOR J=1 TO N1
1520 FOR L=1 TO N1
1530 LET M(J,L)=0
1540 LET K(J,L)=0
1550 LET Q(J,L)=0
1560 NEXT L
1570 NEXT J
1580 IF T>0 THEN 1810

1600 REM TEST CASE, MASS AND STIFFNESS
1610 LET N2=2
1620 FOR J=1 TO N1
1630 LET M(J,J)=1000/(N1+1)
1640 LET K(J,J)=2*20000*(N1+1)
1650 NEXT J
1660 FOR J=1 TO N1-1
1670 LET K(J,J+1)=-20000*(N1+1)
1680 LET K(J+1,J)=K(J,J+1)
1690 NEXT J

1700 REM TEST CASE, SUPPORT STIFFNESS
1710 FOR J=1 TO N1
1720 LET F(J,1)=0
1730 LET F(J,2)=0
1740 NEXT J
1750 LET F(1,1)=20000*(N1+1)
1760 LET F(N1,2)=20000*(N1+1)
1770 GOTO 2410
```

```
1800 REM ASSIGN NUMBER OF SUPPORTS
1810 PRINT "ENTER NUMBER OF SUPPORTS (1 TO 10)"
1820 INPUT N2
1830 IF N2<1 THEN 1810
1840 IF N2>10 THEN 1810

2000 REM ENTER THE MATRIX ELEMENTS

2100 REM DIAGONAL MASS MATRIX M
2110 FOR J=1 TO N1
2120 PRINT "ENTER MASS";J
2130 INPUT M(J,J)
2140 IF M(J,J)>0 THEN 2170
2150 PRINT "MASSES MUST BE POSITIVE.  TRY AGAIN."
2160 GOTO 2120
2170 NEXT J

2200 REM SYMMETRIC STIFFNESS MATRIX K
2210 FOR J=1 TO N1
2220 FOR L=J TO N1
2230 PRINT "STIFFNESS MATRIX ROW";J;"COLUMN";L
2240 INPUT K(J,L)
2250 LET K(L,J)=K(J,L)
2260 NEXT L
2270 NEXT J

2300 REM SUPPORT-STIFFNESS MATRIX F
2310 FOR J=1 TO N1
2320 FOR L=1 TO N2
2330 PRINT "STIFFNESS COORDINATES [illegible] PROPT";L
2340 INPUT F(J,L)
2350 NEXT L
2360 NEXT J
2370 PRINT
```

```
2400 REM LABEL THE CASE
2410 PRINT "THIS IS CASE";T
2420 PRINT

2500 REM ECHO THE MASS MATRIX
2510 PRINT "MASS MATRIX M ="
2520 FOR J=1 TO N1
2530 FOR L=1 TO N1
2540 PRINT M(J,L),
2550 NEXT L
2560 PRINT
2570 NEXT J
2580 PRINT

2600 REM ECHO THE STIFFNESS MATRIX
2610 PRINT "STIFFNESS MATRIX K ="
2620 FOR J=1 TO N1
2630 FOR L=1 TO N1
2640 PRINT K(J,L),
2650 NEXT L
2660 PRINT
2670 NEXT J
2680 PRINT

2700 REM ECHO THE SUPPORT-STIFFNESS MATRIX
2710 PRINT "SUPPORT-STIFFNESS MATRIX F ="
2720 FOR J=1 TO N1
2730 FOR L=1 TO N2
2740 PRINT F(J,L),
2750 NEXT L
2760 PRINT
2770 NEXT J
2780 PRINT
```

```
3000 REM CHANGE OR CORRECT MATRIX ELEMENTS

3100 REM CHECK THE MATRICES
3110 PRINT "PLEASE CHECK THE MATRICES.  IF THEY ARE GOOD"
3120 PRINT "ENTER 0. IF YOU WANT TO CHANGE ANY, ENTER 1."
3130 INPUT J
3140 IF J=0 THEN 4110

3200 REM CHANGE THE MASS MATRIX M
3210 PRINT "MASS TO BE CHANGED OR 0 IF NO CHANGE"
3220 INPUT J
3230 IF J<1 THEN 3310
3240 PRINT M(J,J);"IS OLD MASS";J;". ENTER NEW VALUE:"
3250 INPUT M(J,J)
3260 IF M(J,J)>0 THEN 3210
3270 PRINT "MASSES MUST BE POSITIVE NUMBERS!"
3280 GOTO 3240

3300 REM CHANGE THE STIFFNESS MATRIX K
3310 PRINT "ENTER ROW, COLUMN OF ELEMENT TO BE"
3320 PRINT "CHANGED IN K.  ENTER 0,0 IF NO CHANGE."
3330 INPUT J,L
3340 IF J=0 THEN 3410
3350 PRINT K(J,L);"IS OLD";J;L;".  ENTER NEW VALUE:"
3360 INPUT K(J,L)
3370 LET K(L,J)=K(J,L)
3380 GOTO 3310
```

```
3400 REM CHANGE THE SUPPORT-STIFFNESS MATRIX F
3410 PRINT "ENTER ROW, COLUMN OF ELEMENT TO BE"
3420 PRINT "CHANGED IN F.  ENTER 0,0 IF NO CHANGE."
3430 INPUT J,L
3440 IF J=0 THEN 2410
3450 PRINT F(J,L);"IS OLD";J;L;".  ENTER NEW VALUE:"
3460 INPUT F(J,L)
3470 GOTO 3410

4000 REM START NORMAL-MODE ANALYSIS
4100 REM NORMALIZE ON THE MASS MATRIX, QT*M*Q = I
4110 FOR J=1 TO N1
4120 LET Q(J,J)=1/SQR(M(J,J))
4130 NEXT J

4200 REM SYMMETRIC DYNAMIC MATRIX, QT*K*Q
4210 FOR J=1 TO N1
4220 FOR L=1 TO N1
4230 LET P(J,L)=Q(J,J)*K(J,L)*Q(L,L)
4240 NEXT L
4250 NEXT J

4300 REM SHOW THE DYNAMIC MATRIX
4310 PRINT "SYMMETRIC DYNAMIC MATRIX QT*K*Q ="
4320 FOR J=1 TO N1
4330 FOR L=1 TO N1
4340 PRINT P(J,L),
4350 NEXT L
4360 PRINT
4370 NEXT J
4380 PRINT
```

```
5000 REM DIAGONALIZE THE DYNAMIC MATRIX

5100 REM SET COUNTER AND RUN THROUGH OFFDIAGONAL ELEMENTS
5110 PRINT "CALCULATING...."
5120 LET E=0
5130 FOR J=1 TO N1-1
5140 FOR L=J+1 TO N1
5200 REM SORT COLUMNS BY INCREASING FREQUENCY
5210 IF P(J,J)<=P(L,L) THEN 5410
5220 FOR J1=1 TO N1
5230 LET Z=Q(J1,J)
5240 LET Q(J1,J)=Q(J1,L)
5250 LET Q(J1,L)=Z
5260 LET Z=P(J1,J)
5270 LET P(J1,J)=P(J1,L)
5280 LET P(J1,L)=Z
5290 NEXT J1

5300 REM AND INTERCHANGE ROWS OF P AS WELL
5310 FOR J1=1 TO N1
5320 LET Z=P(J,J1)
5330 LET P(J,J1)=P(L,J1)
5340 LET P(L,J1)=Z
5350 NEXT J1

5400 REM SKIP SMALL VALUES
5410 IF ABS(P(J,L)+P(L,J))<.01 THEN 5920

5500 REM DON'T DIVIDE BY ZERO
5510 IF P(J,J)<P(L,L) THEN 5610
5520 LET C=SQR(.5)
5530 LET S=C
5540 GOTO 5710
```

```
5600 REM JACOBI ROTATION
5610 LET H=.5*ATN((P(J,L)+P(L,J))/(P(J,J)-P(L,L)))
5620 LET C=COS(H)
5630 LET S=SIN(H)

5700 REM UPDATE THE COLUMNS OF THE MATRICES
5710 FOR J1=1 TO N1
5720 LET Z=C*Q(J1,J)+S*Q(J1,L)
5730 LET Q(J1,L)=C*Q(J1,L)-S*Q(J1,J)
5740 LET Q(J1,J)=Z
5750 LET Z=C*P(J1,J)+S*P(J1,L)
5760 LET P(J1,L)=C*P(J1,L)-S*P(J1,J)
5770 LET P(J1,J)=Z
5780 NEXT J1

5800 REM AND ALSO THE ROWS OF P
5810 FOR J1=1 TO N1
5820 LET Z=C*P(J,J1)+S*P(L,J1)
5830 LET P(L,J1)=C*P(L,J1)-S*P(J,J1)
5840 LET P(J,J1)=Z
5850 NEXT J1

5900 REM STEP THE COUNTER AND END THE LOOP
5910 LET E=E+1
5920 NEXT L
5930 NEXT J

6000 REM SHOW AND TELL THE NORMAL MODES

6100 REM IS P DIAGONAL YET?
6110 PRINT "ZAPPED";E,"OF THE OFFDIAGONAL ELEMENTS "
6120 IF E>0 THEN 5120
```

```
6200 REM SHOW MODESHAPES
6210 PRINT "MODESHAPE MATRIX Q ="
6220 FOR J=1 TO N1
6230 FOR L=1 TO N1
6240 PRINT Q(J,L),
6250 NEXT L
6260 PRINT
6270 NEXT J
6280 PRINT

6300 REM SHOW FREQUENCY-SQUARED MATRIX
6310 PRINT "FREQUENCY-SQUARED MATRIX QT*K*Q ="
6320 FOR J=1 TO N1
6330 FOR L=1 TO N1
6340 PRINT P(J,L),
6350 NEXT L
6360 PRINT
6370 NEXT J
6380 PRINT

6400 REM CHECK FOR LOOSE PARTS
6410 FOR J=1 TO N1
6420 IF P(J,J)<>0 THEN 6440
6430 LET P(J,J)=-.01
6440 NEXT J

6500 REM PARTICIPATION-FACTOR MATRIX R
6510 FOR J=1 TO N1
6520 FOR L=1 TO N2
6530 LET R(J,L)=0
6540 FOR J1=1 TO N1
6550 LET R(J,L)=R(J,L)+Q(J1,J)*F(J1,L)
6560 NEXT J1
6570 LET R(J,L)=R(J,L)/P(J,J)
6580 NEXT L
6590 NEXT J
```

```
6600 REM SHOW THE PARTICIPATION FACTOR
6610 PRINT "PARTICIPATION FACTOR R ="
6620 FOR J=1 TO N1
6630 FOR L=1 TO N2
6640 PRINT R(J,L),
6650 NEXT L
6660 PRINT
6670 NEXT J
6680 PRINT

6700 REM CHECK FOR NEGATIVE EIGENVALUES
6710 FOR J=1 TO N1
6720 IF P(J,J)>0 THEN 6770
6730 IF P(J,J)>-.011 THEN 6760
6740 PRINT "STRUCTURE COLLAPSES IN MODE";J
6750 PRINT "THERE IS A MISTAKE IN YOUR STIFFNESS MATRIX."
6760 LET P(J,J)=0
6770 NEXT J

6800 REM CALCULATE FREQUENCIES
6810 FOR J=1 TO N1
6820 LET F1(J)=SQR(386*P(J,J))/6.283185
6830 NEXT J

6900 REM CALCULATE MODAL WEIGHTS
6910 FOR J=1 TO N1
6920 LET W(J)=0
6930 FOR L=1 TO N2
6940 LET W(J)=W(J)+ABS(R(J,L))
6950 NEXT L
6960 LET W(J)=W(J)*W(J)
6970 NEXT J
```

```
7000 REM FREQUENCIES, WEIGHTS, AND INPUTS

7100 REM REAL OR FAKE INPUTS
7110 IF T=0 THEN 7410
7120 PRINT "ENTER 0 TO GET FAKE INPUTS (EXAMPLE ONLY),"
7130 PRINT "OR ENTER 1 TO SUPPLY INPUTS FROM TABLES."
7140 INPUT J
7150 IF J=0 THEN 7410

7200 REM ENTER INPUTS
7210 FOR J=1 TO N1
7220 PRINT "INPUT FOR";W(J);"POUNDS AND";F1(J);"HERTZ:"
7230 INPUT D(J)
7240 NEXT J

7300 REM ENTER FRAME FACTORS
7310 FOR J=1 TO N2
7320 PRINT "FRAME FACTOR FOR SUPPORT";J
7330 INPUT F2(J)
7340 NEXT J
7350 GOTO 7610

7400 REM INPUTS (FAKE) FOR TEST CASE
7410 FOR J=1 TO N1
7420 LET D(J)=.3*P(J,J)/SQR(1+.000001*W(J)*P(J,J))
7430 NEXT J

7500 REM FRAME FACTORS (FAKE) FOR TEST CASE
7510 LET F2(1)=1
7520 FOR J=2 TO N2
7530 LET F2(J)=.5*F2(J-1)
7540 NEXT J
```

```
7600 REM SHOW THE MODES
7610 PRINT "MODE","FREQUENCY","WEIGHT","INPUT"
7620 PRINT ,"(HERTZ)","(POUNDS)","(G)"
7630 FOR J=1 TO N1
7640 PRINT J, F1(J),W(J),D(J)
7650 NEXT J
7660 PRINT

7700 REM SHOW THE FRAME FACTORS
7710 PRINT "FRAME FACTORS (RATIO TO IMPACT POINT)"
7720 FOR J=1 TO N2
7730 PRINT F2(J),
7740 NEXT J
7750 PRINT
7760 PRINT

8000 REM PEAK RESPONSES

8100 REM CALCULATE ACCELERATIONS OF MODES
8110 FOR J=1 TO N1
8120 LET B(J)=0
8130 FOR L=1 TO N2
8140 LET B(J)=B(J)+R(J,L)*F2(L)*D(J)
8150 NEXT L
8160 NEXT J

8200 REM CONVERT TO ACCELERATIONS OF MASSES
8210 FOR J=1 TO N1
8220 FOR L=1 TO N1
8230 LET A(J,L)=Q(J,L)*B(L)
8240 NEXT L
8250 NEXT J
```

```
8300 REM FIND PEAK FORCES IN EACH MODE
8310 FOR J=1 TO N1
8320 FOR L=1 TO N1
8330 LET G(J,L)=M(J,J)*A(J,L)
8340 NEXT L
8350 NEXT J

8400 REM SHOW THE ACCELERATIONS
8410 PRINT "PEAK ACCELERATIONS (G) IN EACH MODE"
8420 FOR J=1 TO N1
8430 FOR L=1 TO N1
8440 PRINT A(J,L),
8450 NEXT L
8460 PRINT
8470 NEXT J
8480 PRINT

8500 REM SHOW THE FORCES
8510 PRINT "PEAK FORCES (POUNDS) IN EACH MODE"
8520 FOR J=1 TO N1
8530 FOR L=1 TO N1
8540 PRINT G(J,L),
8550 NEXT L
8560 PRINT
8570 NEXT J
8580 PRINT

9000 REM WINDUP

9100 REM WHAT SHALL WE DO NEXT?
9110 PRINT "THIS IS ALL THIS PROGRAM DOES.  CHOOSE:"
9120 PRINT "1 - NEW IMPACT POINT"
9130 PRINT "2 - NEW INPUT TABLES"
9140 PRINT "3 - CHANGE THE SUPPORTS"
9150 PRINT "4 - CHANGE THE STIFFNESS MATRIX"
9160 PRINT "5 - CHANGE THE MASS MATRIX"
9170 PRINT "6 - NEW STRUCTURE"
9180 PRINT "9 - END THIS RUN"
```

```
9200 REM CHOICE
9210 INPUT J
9220 IF J=1 THEN 7310
9230 IF J=2 THEN 7210
9240 IF J=3 THEN 3410
9250 IF J=4 THEN 3310
9260 IF J=5 THEN 3210
9270 IF J=6 THEN 1310
9280 IF J=9 THEN 9910
9290 GOTO 9110

9900 REM END
9910 PRINT "THANK YOU FOR RUNNING THIS PROGRAM."
9920 PRINT "FINISHED"
9930 END
```

COMMENTS

Documentation

The program is self-documented by remarks. It uses the same procedures and most of the same symbols as are described in the text of this report.

Core BASIC

The program is written in primitive BASIC language without any of the enhancements that are available in various dialects of BASIC. As such, it is long and slow, but should run as is on any computer that has a BASIC compiler or interpreter. The program is also wasteful of memory since, for clarity, it does not use any shortcuts and defines new variables for each step in the calculation.

SAMPLE OUTPUT

Test case, Case 0

The program is loaded with an example consisting of a uniform bar with weight 1000 pounds and axial stiffness 20,000 pounds per inch. The bar can be represented by from one to ten lumped masses evenly spaced along a massless spring. A simple analytical solution is available for the fixed-base frequencies and modeshapes of the string of equal masses.[2]

Following is part of the output from Case 0. The bar was modeled using four stations, each representing the motion of a 200-pound mass lump. The remaining mass was lumped with the supports at each end of the bar.

The test case uses a simple formula to generate IDDAM-like inputs. The inputs are for sake of the example only and are not intended to apply to any particular situation.

```
THIS IS CASE 0

MASS MATRIX M =
 200          0            0            0
 0            200          0            0
 0            0            200          0
 0            0            0            200

STIFFNESS MATRIX K =
 200000      -100000       0            0
-100000       200000      -100000       0
 0           -100000       200000      -100000
 0            0           -100000       200000
```

---

[2] Fan Y. Chen, "On Modeling and Direct Solution of Certain Free Vibration Systems," *Journal of Sound and Vibration*, Volume 14, Number 1, (1971), pages 57 to 70.

```
SUPPORT-STIFFNESS MATRIX F =
 100000          0
 0               0
 0               0
 0               100000

SYMMETRIC DYNAMIC MATRIX QT*K*Q =
 1000          -500            0              0
-500            1000          -500            0
 0             -500            1000          -500
 0              0             -500            1000

CALCULATING....
ZAPPED 6 OF THE OFFDIAGONAL ELEMENTS.
ZAPPED 6 OF THE OFFDIAGONAL ELEMENTS.
ZAPPED 5 OF THE OFFDIAGONAL ELEMENTS.
ZAPPED 0 OF THE OFFDIAGONAL ELEMENTS.

MODESHAPE MATRIX Q =
 2.628614E-02  -4.25328E-02    4.253267E-02  -2.628634E-02
 4.253229E-02  -2.628698E-02  -2.628676E-02   4.25324E-02
 4.25328E-02    2.628614E-02  -2.628635E-02  -4.253267E-02
 2.628698E-02   4.253229E-02   4.253241E-02   2.628677E-02

FREQUENCY-SQUARED MATRIX QT*K*Q =
 190.983        4.936953E-03   2.26589E-05    5.789629E-06
 4.912365E-03   690.983       -5.086626E-06  -2.625585E-05
 3.227984E-05   4.204654E-06   1309.017      -2.479627E-03
-7.09665E-06    2.624094E-05  -2.425924E-03   1809.017

PARTICIPATION FACTOR R =
 13.7636        13.76404
-6.155405       6.155331
 3.249208       3.249187
-1.453074       1.453097
```

MODE	FREQ EN	[illegible]	[illegible]
	HEAT [illegible]	[illegible]	[illegible]
	[illegible]	[illegible]	[illegible]
2	[illegible]	[illegible]	[illegible]
3	[illegible]	[illegible]	[illegible]
4	[illegible]	[illegible]	[illegible]

FRAME FACTORS [illegible]

1	[illegible]

PEAK ACCELERAT[illegible]

29 [illegible]	[illegible]	[illegible]	[illegible]
47 [illegible]	[illegible]	[illegible]	[illegible]
47 [illegible]	[illegible]	[illegible]	[illegible]
29 [illegible]	[illegible]	[illegible]	[illegible]

PEAK FORCES [illegible]

5812 34	[illegible]	[illegible]	[illegible]
9404 655	[illegible]	[illegible]	[illegible]
9404 [illegible]	[illegible]	[illegible]	[illegible]
5812 524	[illegible]	[illegible]	[illegible]

Textbook example

[illegible]

Textbook [illegible]

TH[illegible] CASE

MASS MATR[illegible]

325	
[illegible]	[illegible]

ST FFNESS MATR[illegible]

26666 [illegible]	[illegible]
[illegible]	[illegible]

```
SUPPORT-STIFFNESS MATRIX F =
  [illegible]
                [illegible]

SYMMETRIC DYNAMIC MATRIX QT*K*Q =
 [illegible]        65.37206
-65.37206        [illegible]

CALCULATING
CAPPED    OF THE OFFD AGONAL ELEMENTS
CAPPED    OF THE OFFD AGONAL ELEMENTS

MODESHAPE MATRIX Q =
 5.[illegible]98516E-02                -1.935114E-02
 2.466796E-02                  6.626833E-02

FREQUENCY-SQUARED MATRIX QT*K*Q =
 57.71698                      0
   [illegible]07349E-06                257.6677

PART C PATION FACTOR P =
 9.006409        12.82185
 [illegible]        [illegible]715557

MODE            FREQUENCY      WEIGHT         INPUT
                (HERTZ         (POUNDS)       (G)
                23.75558       476.4946       26
 2              5[illegible].19307      [illegible]1.68277       [illegible]19

FRAME FACTORS (RATIO TO IMPACT POINT)
 1                45

PEAK ACCELERATIONS (G) IN EACH MODE
 1[illegible].97245      -6.265853
 9.477313        21.45753
```

PEAK FORCES (POUNDS) IN EACH MODE

6491.047	-2036.402
1895.463	4291.506

END
DATE
FILMED

4-88
DTIC